ARIZONA DEPARTMENT OF TRANSPORTATION

REPORT NUMBER: AZ-SP-9202

SMALL SIGN SUPPORT INVESTIGATION

Special Report

Prepared by:
Yee-Jung Ho
Dwight Metcalf
Sylvester Kalevela
Arizona Transportation Research Center
206 South 17th Avenue
Phoenix, Arizona 85007

May 1992

Prepared for:
Arizona Department of Transportation
206 South 17th Avenue
Phoenix, Arizona 85007
in cooperation with
U.S. Department of Transportation
Federal Highway Administration

The contents of this report reflect the views of the authors who are responsible for the facts and the accuracy of the data presented herein. The contents do not necessarily reflect the official views or policies of the Arizona Department of Transportation or the Federal Highways Administration. This report does not constitute a standard, specification, or regulation. Trade or manufacturer's names which may appear herein are cited only because they are considered essential to the objectives of the report. The U.S. Government and the State of Arizona do not endorse products or manufacturers.

Technical Report Documentation Page

1. Report No. FHWA-AZSP-9202	2. Government Accession No.	3. Recipient's Catalog No.
4. Title and Subtitle SMALL SIGN SUPPORT INVESTIGATION		5. Report Date May, 1992 6. Performing Organization Code
7. Authors Yee-Jung Ho, Dwight Metcalf, Sylvester Kalevela		8. Performing Organization Report No.
9. Performing Organization Name and Address **ARIZONA TRANSPORTATION RESEARCH CENTER** **206 S. 17TH AVENUE, MAIL DROP 075R** **PHOENIX, ARIZONA 85007**		10. Work Unit No. 11. Contract or Grant No.
12. Sponsoring Agency Name and Address **ARIZONA DEPARTMENT OF TRANSPORTATION** **206 S. 17TH AVENUE** **PHOENIX, ARIZONA 85007**		13.Type of Report & Period Covered FINAL, 1991-92 14. Sponsoring Agency Code

15. Supplementary Notes
Prepared in cooperation with the U.S. Department of Transportation, Federal Highway Administration

16. Abstract

The Arizona Department of Transportation (ADOT), in an effort to comply with FHWA and NCHRP 230 guidelines, and in cooperation with the Texas Transportation Institute (TTI) developed a generic U-channel small sign support system which was implemented in the summer of 1991. The system consists of 3 lb/ft, 80 ksi U-channel posts with a 5" ground level lap splice (spacers between the base and sign post), and two grade 9 bolts 3" apart. Shortly after the first installations some single support signs failed due to winds of approximately 40 mph.

ADOT began a study shortly after the first failures to determine the reasons for the failures. The investigation involved meetings with ADOT maintenance personnel, U-channel post suppliers, and TTI. Field evaluations of the generic U-channel system were performed. Material property tests were performed on the U-channel posts purchased as part of the implementation of the generic small sign support. Static and dynamic testing of the U-channel post system were performed as well.

Field evaluations indicate that contractor installed signs have used a variety of spacers. The material property tests indicated that at least some of the U-channels did not meet the 80 ksi minimum yield point. Static testing indicated that the system should be able to withstand a static load based on 100 mph winds. Dynamic testing, developed specifically for this project by TTI, could not prove that the ADOT generic U-channel single post support can perform satisfactorily under fluttering high wind.

ADOT has also began installing a series of pilot studies. These pilot studies will give field performance data upon which management can make a decision as to what ADOT's small sign support of the future will be. In the interim ADOT will either use a minumum of two supports per sign or will specify square steel tube breakaway small sign supports.

17. Key Words Flange, Side, Grade 9 Bolt, Wind Speed, Rail Steel, Billet Steel, Static Testing, Dynamic Testing, Tensile Testing, Bending, Torsion, Fatigue, Breakaway sign support,Small Sign Support, U-channel, Lap-Splice		18. Distribution Statement Document is available to the U.S. public through the National Technical Information Service, Springfield, Virginia, 22161	23. Registrant's Seal Registered Professional Engineer (Civil) Certificate No. 10726 Yee-Jung Ho YEE-JUNG HO Date Signed 7/16/92 Arizona U.S.A.
19. Security Classification Unclassified	20. Security Classification Unclassified	21. No. of Pages 118	22. Price

SI* (MODERN METRIC) CONVERSION FACTORS

APPROXIMATE CONVERSIONS TO SI UNITS

Symbol	When You Know	Multiply By	To Find	Symbol
		LENGTH		
in	inches	25.4	millimetres	mm
ft	feet	0.305	metres	m
yd	yards	0.914	metres	m
mi	miles	1.61	kilometres	km
		AREA		
in^2	square inches	645.2	millimetres squared	mm^2
ft^2	square feet	0.093	metres squared	m^2
yd^2	square yards	0.836	metres squared	m^2
ac	acres	0.405	hectares	ha
mi^2	square miles	2.59	kilometres squared	km^2
		VOLUME		
fl oz	fluid ounces	29.57	millilitres	mL
gal	gallons	3.785	litres	L
ft^3	cubic feet	0.028	metres cubed	m^3
yd^3	cubic yards	0.765	metres cubed	m^3

NOTE: Volumes greater than 1000 L shall be shown in m^3.

		MASS		
oz	ounces	28.35	grams	g
lb	pounds	0.454	kilograms	kg
T	short tons (2000 lb)	0.907	megagrams	Mg
		TEMPERATURE (exact)		
°F	Fahrenheit temperature	5(F-32)/9	Celcius temperature	°C

APPROXIMATE CONVERSIONS FROM SI UNITS

Symbol	When You Know	Multiply By	To Find	Symbol
		LENGTH		
mm	millimetres	0.039	inches	in
m	metres	3.28	feet	ft
m	metres	1.09	yards	yd
km	kilometres	0.621	miles	mi
		AREA		
mm^2	millimetres squared	0.0016	square inches	in^2
m^2	metres squared	10.764	square feet	ft^2
ha	hectares	2.47	acres	ac
km^2	kilometres squared	0.386	square miles	mi^2
		VOLUME		
mL	millilitres	0.034	fluid ounces	fl oz
L	litres	0.264	gallons	gal
m^3	metres cubed	35.315	cubic feet	ft^3
m^3	metres cubed	1.308	cubic yards	yd^3
		MASS		
g	grams	0.035	ounces	oz
kg	kilograms	2.205	pounds	lb
Mg	megagrams	1.102	short tons (2000 lb)	T
		TEMPERATURE (exact)		
°C	Celcius temperature	1.8C + 32	Fahrenheit temperature	°F

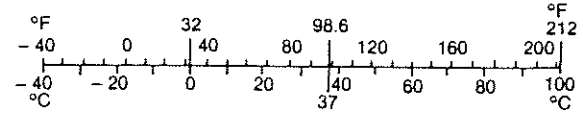

* SI is the symbol for the International System of Measurement

(Revised April 1989)

Table of Contents

INTRODUCTION 1
- Background 1
- Standard Drawing and Specification for the New U-channel System 3

PROBLEM DESCRIPTION 6
- Construction Installations vs. Maintenance Installations 10
- U-channel Suppliers 12

PROJECT APPROACH 13
- Short Term vs. Long Term Strategy 18
- Tensile Testing 18
- Vendor Participation 24
- Cross-Section Variability 24
- Chemical Analysis 25
- U-channel System Static Testing (Bending and Torsion) 26
- U-channel System Dynamic Testing 28
- Pilot Studies 33

IDENTIFIED PROBLEMS 34
- U-channel Selection Chart 34
- Standard Specification 37
- Standard Drawing 37
- Effect of Size and Spacing of Spacers on Stresses in Posts 37
- Spacer Thickness 38
- Installation Depth 38
- Post Yield Strength 38

COST CONSIDERATIONS 38

CONCLUSIONS 40

REFERENCES 42

APPENDIX A: "Standard Drawings for Small Sign Support Systems Tested by TTI" A-1

APPENDIX B: "Investigation of Stresses in U-channel Posts From Wind" B-1

APPENDIX C: "Cross-Section Drawings For U-channel Post Suppliers" C-1

APPENDIX D: "District Traffic Engineers Survey Form" D-1

APPENDIX E: "Marion Steel 3 lb/ft U-channel Post Cross-Section Variability" E-1

APPENDIX F: " Interpretation of Static Testing Results" F-1

APPENDIX G: "Structural Calculations for Pilot Testing" G-1

Table of Contents (continued)

List of Tables

1. RESULTS FROM TTI CRASH TESTING 2
2. REPORTED FAILURES 7
3. U-CHANNEL COUPON TENSILE TEST DATA (TTI) 19
4. U-CHANNEL COUPON TENSILE TEST DATA (WTI) 19
5. ADOT CHEMICAL COMPOSITION REQUIREMENTS FOR 3 LB/FT U-CHANNEL POSTS 25
6. RESULTS OF CHEMICAL ANALYSIS ON U-CHANNEL POSTS 25
7. STATIC TEST RESULTS 29
8. DYNAMIC TEST RESULTS 32
9. PILOT STUDIES SIGN SUPPORT STRESS LEVELS 34
10. RESULTS OF STRUCTURAL ANALYSIS ON U-CHANNEL POSTS 35
11. COMPARISON OF SECTIONS 35
12. MAXIMUM LOADS ON BOLTS AT POST SPLICE 36
13. MAXIMUM FLEXURAL STRESSES IN BACK OF POST AT SPLICE 37
14. U-CHANNEL & P1/P2: NEW INSTALLATION COST BREAKDOWN IN DOLLARS 39
15. U-CHANNEL & P1/P2: REPLACEMENT COST BREAKDOWN IN DOLLARS 39

List of Figures

1. ADOT U-CHANNEL SIGN SUPPORT STANDARD DRAWING 4
2. ADOT STANDARD SPECIFICATION FOR U-CHANNEL SMALL SIGN SUPPORTS 5
3. ZIPPER PATTERN RESULTING FROM SIGN POST FAILURE 8
4. DIAGONAL TEARING RESULTING FROM SIGN POST FAILURE 8
5. 5/8" INSIDE DIAMETER GALVANIZED WATER PIPE 10
6. 3/8" INSIDE DIAMETER GALVANIZED WATER PIPE 11
7. 5/8" INSIDE DIAMETER ELECTRICAL METALLIC TUBING (EMT) 11
8. HEXAGONAL THREADED SPACER 12
9. PROBLEM: FRANKLIN EZE-ERECT NUT USED INSTEAD OF ADOT STANDARD NUT 15
10. PROBLEM: POST ON WRONG SIDE OF STUB 16
11. PROBLEM: NON-STANDARD SPLICE 16
12. PROBLEM: NON-STANDARD SPLICE 17
13. PROBLEM: NO SPACER, WRONG BOLT 17
14. NOMINAL STRESS VS. STRAIN CURVES FROM TTI TENSILE TESTING FOR SPECIMENS M1-M4 20
15. NOMINAL STRESS VS. STRAIN CURVES FROM TTI TENSILE TESTING FOR SPECIMENS M5-M8 21
16. NOMINAL STRESS VS. STRAIN CURVES FROM TTI TENSILE TESTING FOR SPECIMENS M9-M12 22

17. NOMINAL STRESS VS. STRAIN CURVES FROM TTI TENSILE TESTING FOR SPECIMENS M13-M16 23
18. FIXED END AND SPLICE 26
19. DEVICE USED TO APPLY STATIC BENDING AND TORSION 27
20. U-CHANNEL SMALL SIGN SUPPORT UNDER LOAD 27
21. U-CHANNEL POST DYNAMIC TEST SET-UP 31
22. SHAKER AT END OF POST 31

INTRODUCTION

In the Fall of 1991, the Arizona Transportation Research Center (ATRC) of the Arizona Department of Transportation (ADOT) learned that a newly implemented U-channel small sign support system (a small sign being defined as less than 60 ft^2) was failing in significant numbers. ADOT has also purchased a large number of U-channel posts from Marion Steel for the maintenance forces. This report documents the action taken by the ATRC to determine the cause of the problem and possible solutions for recommendation to management regarding utilization of the Marion U-channel posts, and the suitability of the U-channel post system for maintenance and construction purposes.

Background

In 1984, ADOT initiated a research project with Texas Transportation Institute (TTI) to determine which of the small sign support systems used by ADOT met Federal Highway Administration (FHWA) criteria for breakaway sign supports. The testing (Small Sign Support Analysis, Report # FHWA-AZ88-202) was initiated October 1, 1984. Originally the project (Phase I) consisted of 18 full-scale vehicular crash tests, but was modified in May of 1985 to include 5 additional tests. The tests were conducted and evaluated according to the recommendations of NCHRP Report 230 and the 1985 AASHTO "Standard Specifications for Structural Supports for Highway Signs, Luminaries and Traffic Signals." NCHRP Report 230 Classification S1 soil (strong soil) was used for all testing. TTI recommended further testing to insure that results were applicable in S2 soil (weak soil). Table 1 gives the test matrix and results[1].

From the results of the test program in Phase I, the following systems complied with the recommended safety performance standards: 1) one P1 post, 2) one 3 lb/ft U-channel post, 3) one 4 lb/ft U-channel post, 4) two 3 lb/ft U-channel posts, and 5) a slipbase design having two S4 x 7.7 posts with a hinge at the mid-height of the sign panel. The following systems were not in compliance with the recommended standards: 1) two or more P2 posts within a 7 ft spacing, 2) three or more 3 lb/ft U-channel posts within a 7 ft spacing, and 3) two or more 4 lb/ft U-channel posts within a 7 ft spacing[1]. APPENDIX A contains drawings for all the mentioned small sign supports.

Review of past signing and striping standard drawings indicates that there was no standard drawing for U-channel small sign supports before implementation of 3 lb/ft, 4" lap splice U-channel small sign support. There is guidance for small sign supports under the "Roadside Sign

TABLE 1. RESULTS FROM TTI CRASH TESTING

Test No.	Test Article	No. of Post hit	Vehicle Impact Vel. (mph)	Test Results: Occupant Impact Velocity (ft/sec)	Test Results: Occupant Ridedown Accel. (G's)	Test Results: Change in Vehicle Mom. (lb-sec)	Test Results: Change in Vehicle Velocity (ft/sec)	Adherence to Evaluation Criteria*: Structural Capacity: Proper Activation ?	Structural Capacity: Penetration of Passenger Compart. ?	Occupant Risk: Vehicle Stable ?	Occupant Risk: Acceptable Impact Velocity ?	Occupant Risk: Acceptable Ridedown Acceler. ?	Vehicle Trajectory: Trajectory Acceptable ?
1.	Two S4x7.7 Slipbase, Hinge at Midheight of Panel	1 of 2	19.6	No Contact	No Contact	282	5.0	Yes	No	Yes	Yes	Yes	Yes
2.	Same as Test 1	1 of 2	59.3	No Contact	No Contact	174	3.1	Yes	No	Yes	Yes	Yes	Yes
3.	One Square Steel Tube (unistrut) ADOT P1 Post	1 of 1	20.0	No Contact	No Contact	193	3.5	Yes	No	Yes	Yes	Yes	Yes
4.	Same as Test 2	1 of 1	56.8	No Contact	No Contact	468	8.5	Yes	No	Yes	Yes	Yes	Yes
5.	Three Square Steel Tubes (Unistrut) ADOT P2 Posts	2 of 3	19.7	21.0	0.9	1150	20.7	Yes	No	Yes	No	Yes	Yes
6.	Same as 5.	3 of 3	59.3	24.9	3.3	1459	26.3	Yes	No	Yes	No	Yes	Yes
7.	One 3 lb/ft High Carbon, Billet Steel U-Post (100 ksi)	1 of 1	60.5	No Contact	No Contact	169	3.1	Yes	No	Yes	Yes	Yes	Yes
8.	Same as 7	1 of 1	19.9	No Contact	No Contact	339	6.0	Yes	No	Yes	Yes	Yes	Yes
9.	Three 3 lb/ft, High Carbon, Billet Steel U-Posts (100 ksi)	3 of 3	59.3	No Contact	No Contact	590	10.6	Yes	No	Yes	Yes	Yes	Yes
10.	Same as 9	3 of 3	19.4	19.3	1.6	1335	23.9	Yes	No	Yes	No	Yes	Yes
11.	Two 4 lb/ft, High Carbon, Billet Steel U-Posts (80 ksi)	2 of 2	20.2	14.2	1.6	653	12.5	Yes	Partially	Yes	Yes	Yes	Yes
12.	Same as Test 11	2 of 2	60.9	10.1	0.5	589	10.3	Yes	No	Yes	Yes	Yes	Yes
13.	One 4 lb/ft, High Carbon, Billet Steel U-Post (100 ksi)	1 of 1	61.3	No Contact	No Contact	352	6.3	Yes	No	Yes	Yes	Yes	Yes
14.	Three 3 lb/ft, Rail Steel U-Posts (Short Lap Splice)	3 of 3	20.3	26.9	1.6	1541	27.6	Yes	No	Yes	No	Yes	Yes
15.	Same as Test 14	3 of 3	62.0	31.2	4.6	1927	34.5	Yes	Partially	Yes	No	Yes	Yes
16	Three 3 lb/ft, High Carbon, Billet Steel U-Posts (80 ksi)	3 of 3	20.0	22.4	3.6	1534	27.9	Yes	No	Yes	No	Yes	Yes
17.	Same as Test 16	3 of 3	62.0	12.8	2.0	1058	18.9	Yes	No	Yes	Yes	Yes	Yes
18.	Same as Test 16 Except Short Lap Splice	3 of 3	19.5	22.5	1.3	1394	24.9	Yes	No	Yes	No	Yes	Yes
19.	Two Square Steel Tubes (Unistrut) ADOT P2 Design (40 in. Post Spacing)	2 of 2	18.9	14.1	2.5	825	14.7	Yes	No	Yes	Yes	Yes	Yes
20.	Same as 19	2 of 2	57.5	17.4	1.7	1005	17.9	Yes	No	Yes	No	Yes	Yes
21.	Same as 16 Except Short Lap Splice	3 of 3	61.5	19.0	1.9	1235	22.4	Yes	Partially	Yes	No	Yes	Yes
22.	Two 3 lb/ft, High Carbon, Billet Steel U-Posts	2 of 2	20.0	10.1	1.9	534	9.4	Yes	No	Yes	Yes	Yes	Yes
23.	Same as Test 22	2 of 2	62.8	11.8	0.8	688	11.7	Yes	No	Yes	Yes	Yes	Yes

*Recommended limits are as follows: Occupant impact velocity - 15 ft/sec, Occupant ridedown acceleration - 15 g's, See reference 2 for more details

Supports" section of the 1987 "Standard Specifications for Road and Bridge Construction." The following is given ".....Sign supports shall consist of breakaway sign posts and perforated sign posts. The type, size and location of installation of the sign posts will be shown on the project plans.....The breakaway sign posts shall be erected plumb and shall be bolted to the foundation stub posts in accordance with the procedure specified on the plans....."

During testing at TTI, the FHWA made the recommendation that breakaway small sign supports should conform to Reference 2. In particular, breakaway small sign supports should have a base that extends no higher than 4" above ground level. The 4" stub height is called out in order to prevent the base post from rupturing fuel lines or penetrating the passenger compartment after the sign post has been hit by an errant vehicle. The 4" stub height requirement eliminated the previously used mid-height splice U-channel from further consideration.

In response to the FHWA requirement ADOT embarked on the second phase (Phase II) of the TTI study; the development of a generic U-channel small sign support system with a ground level lap splice. In addition to being able to withstand wind loads and meet federal safety standards for crash testing, some of the desired features of the generic lap splice include use of off the shelf hardware and installation procedures simple enough for one maintenance worker. Three and four lb/ft U-channel posts were considered along with many possible splice configurations. Static and crash tests were performed as part of the generic lap splice development. The static testing was used to verify performance with respect to wind loading and the crash testing was used to verify performance with respect to safety. In order to make the installation as simple as possible, a 3" bolt spacing was explored. With a maximum 4" stub height, the maximum bolt spacing possible (without excavation) is 3".

Upon the conclusion of the second phase of the TTI study, ADOT chose the 3 lb/ft U-channel system, with a nested splice, post behind the base. Two Grade 9 bolts spaced at 3" were selected to fasten the splice. A U-channel sign support system standard drawing and standard specification were subsequently developed.

Standard Drawing and Specification for the New U-channel System

ADOT's Traffic Engineering Section developed the standard drawing and ADOT's Contracts and Specifications Section developed the standard specification for the new 3 lb/ft U-channel small sign support system. ADOT's Structures Section developed the wind load chart that gives the maximum sign height for a given number of supports, sign panel size, and sign panel width. The wind load chart was based on the cross-section and strength of the U-channel post and did not consider the splice. The standard drawing indicated 5/8" long spacers. The standard drawing is given in Figure 1 and the standard specification is given in Figure 2. Both

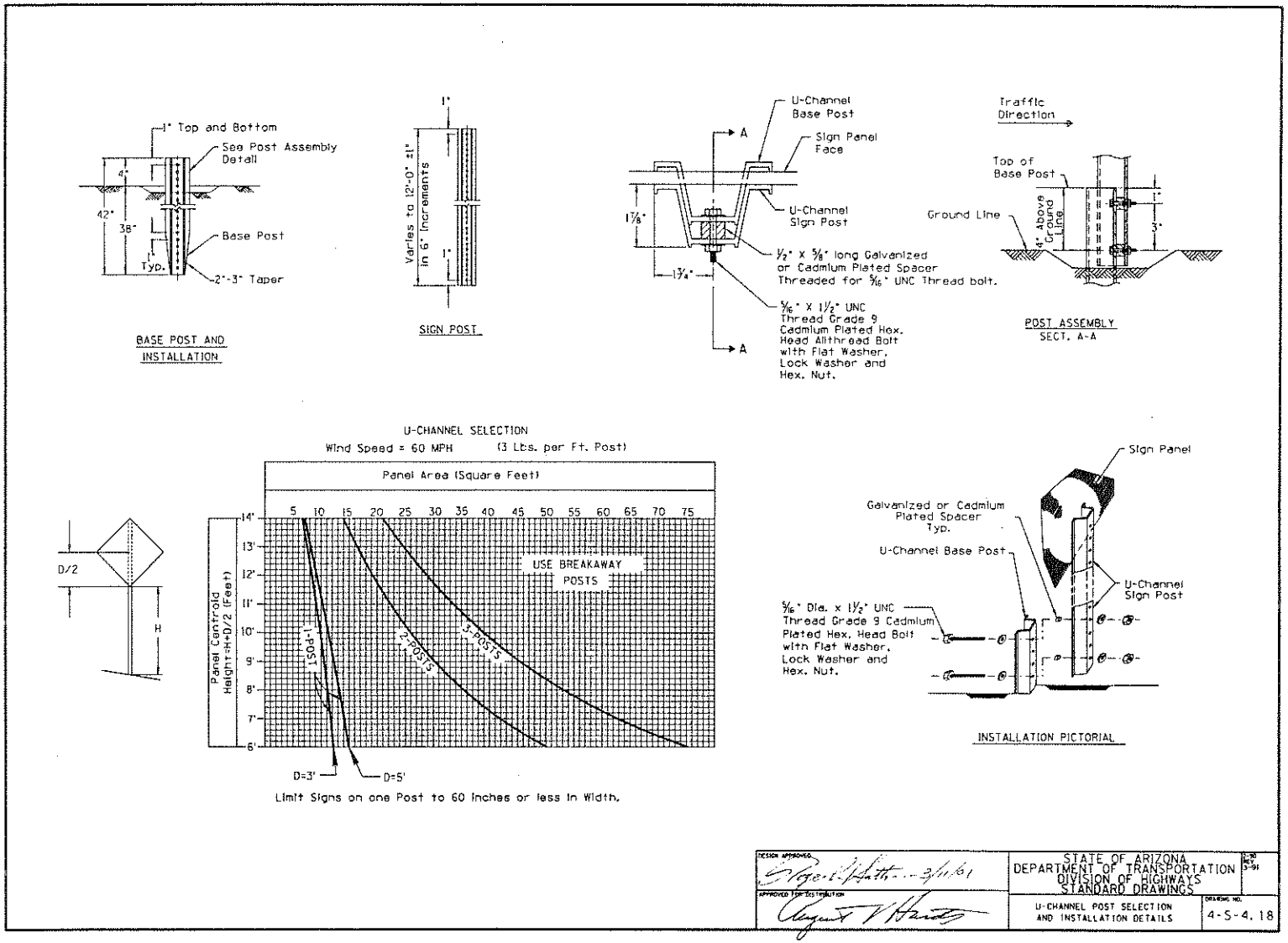

FIGURE 1. ADOT U-CHANNEL SIGN SUPPORT STANDARD DRAWING

607-2.04 U-Channel Sign Posts:

U-channel posts shall be fabricated from rerolled rail steel conforming to the requirements of ASTM A 499 or hot-rolled carbon steel bars.

Prior to rerolling the rail steel, the rail nominal weight shall be 91 pounds per yard and shall meet the requirements of ASTM A 1 pertaining to quality assurance.

Yield Point of the steel shall be 80,000 PSI (Min.).

The cast heat analysis of the steel shall conform to the following requirements:

Element	Composition (Percent)
Carbon	0.67 - 0.82
Manganese	0.70 - 1.10
Phosphorus, max.	.04
Sulphur, max.	.05
Silicon	0.10 - 0.25

Posts shall be a uniform, modified, flanged channel section as shown in the plans. Weight of the posts shall be 3 pounds per lineal foot, plus or minus 5 percent. The post shall be punched with continuous 3/8 inch diameter holes on 1 inch centers. The first hole shall be 1 inch from top and bottom of post.

The post shall consist of two parts, a sign post and a base post. The sign post lengths shall be supplied in 6 inch increments up to 12 feet as required for the installation location. The base posts shall be 42 inches in length and pointed at one end and have at least eighteen holes in the base post, starting 1 inch from the top and continuing at 1 inch increments.

Posts shall be machine straightened to have a smooth uniform finish, free from defects affecting their strength, durability, or appearance. All holes and rough edges shall be free from burrs. The permissible tolerance for straightness shall be within 1/16 inch in three (3) feet.

Posts shall be galvanized after fabrication in accordance with the requirements of ASTM A 123. Bolts, nuts, washers and spacers shall be cadmium plated in accordance with the requirements of ASTM A 165 or zinc plated in accordance with the requirements of ASTM B 633.

For shipment, the posts shall be nested and fastened in such a manner that they will not slip. Care shall be taken during shipping to minimize the rubbing of posts together resulting in damage to the galvanized finished surface. Excessive damage to the finish of the posts during shipping or handling will result in rejection of the damaged posts. Posts shall be bundled in groups of no more than 100.

U-channel base posts shall be driven into the ground to a depth of 38 inches. Where rock is encountered, the rock shall be cored, drilled or removed to a minimum diameter of 8 inches and to a depth sufficient to place portland cement concrete 2 inches below the bottom of the base post and fill the hole to within 1 inch of the top. Solid rock coring or drilling is not required to continue beyond 24 inches in depth regardless of the depth at which the rock is encountered. The base post may be cut at the bottom prior to being set in portland cement concrete where rock does not permit use of full length base post.

FIGURE 2. ADOT STANDARD SPECIFICATION FOR U-CHANNEL SMALL SIGN SUPPORTS

607-2.04 U-Channel Sign Posts:

U-channel posts shall be fabricated from rerolled rail steel conforming to the requirements of ASTM A 499 or hot-rolled carbon steel bars.

Prior to rerolling the rail steel, the rail nominal weight shall be 91 pounds per yard and shall meet the requirements of ASTM A 1 pertaining to quality assurance.

Yield Point of the steel shall be 80,000 PSI (Min.).

The cast heat analysis of the steel shall conform to the following requirements:

Element	Composition (Percent)
Carbon	0.67 - 0.82
Manganese	0.70 - 1.10
Phosphorus, max.	.04
Sulphur, max.	.05
Silicon	0.10 - 0.25

Posts shall be a uniform, modified, flanged channel section as shown in the plans. Weight of the posts shall be 3 pounds per lineal foot, plus or minus 5 percent. The post shall be punched with continuous 3/8 inch diameter holes on 1 inch centers. The first hole shall be 1 inch from top and bottom of post.

The post shall consist of two parts, a sign post and a base post. The sign post lengths shall be supplied in 6 inch increments up to 12 feet as required for the installation location. The base posts shall be 42 inches in length and pointed at one end and have at least eighteen holes in the base post, starting 1 inch from the top and continuing at 1 inch increments.

Posts shall be machine straightened to have a smooth uniform finish, free from defects affecting their strength, durability, or appearance. All holes and rough edges shall be free from burrs. The permissible tolerance for straightness shall be within 1/16 inch in three (3) feet.

Posts shall be galvanized after fabrication in accordance with the requirements of ASTM A 123. Bolts, nuts, washers and spacers shall be cadmium plated in accordance with the requirements of ASTM A 165 or zinc plated in accordance with the requirements of ASTM B 633.

For shipment, the posts shall be nested and fastened in such a manner that they will not slip. Care shall be taken during shipping to minimize the rubbing of posts together resulting in damage to the galvanized finished surface. Excessive damage to the finish of the posts during shipping or handling will result in rejection of the damaged posts. Posts shall be bundled in groups of no more than 100.

U-channel base posts shall be driven into the ground to a depth of 38 inches. Where rock is encountered, the rock shall be cored, drilled or removed to a minimum diameter of 8 inches and to a depth sufficient to place portland cement concrete 2 inches below the bottom of the base post and fill the hole to within 1 inch of the top. Solid rock coring or drilling is not required to continue beyond 24 inches in depth regardless of the depth at which the rock is encountered. The base post may be cut at the bottom prior to being set in portland cement concrete where rock does not permit use of full length base post.

FIGURE 2. ADOT STANDARD SPECIFICATION FOR U-CHANNEL SMALL SIGN SUPPORTS

were developed from the results of the testing conducted by TTI. Because of the problems described in the following sections, ADOT suspended the standard drawing in 1992.

PROBLEM DESCRIPTION

The U-channel sign post standard specification was adopted and implemented in 1991. Failures of single support small sign installations occurred in large numbers in some construction projects soon after they were installed. No reports of failures of installations with two or more posts have been reported. Reports of single support sign post failures included :

- Project M-600-9-502 on Loop 303 (Estrella Freeway) in Phoenix, between Thomas Road and Glendale Avenue. Within three months after installation, 32 of the 85 sign supports had failed due to winds that reportedly did not exceed 40 mph;
- Project M-891-5(1)P on the Show Low Urbanized Area Airport Road and Loop. In this project the U-channel small sign support system was initially installed without spacers and 40 percent of all posts failed;
- Project RS-347(14)P on Maricopa Highway, from Maricopa County line to State Route 84. Seven stop sign supports failed;
- Project RS-577(1)P on State Route 92 (Sierra Vista - Bisbee highway). All stop sign supports failed; and
- Project S-056-1-503 on State Route 86 (Why - Tucson highway), from Avra Valley Road to Ryan Field. Some of the stop sign supports failed.

A comprehensive list of the reported failures is given in Table 2. All the signs in the listed projects were installed by contractors. Most failures occurred from 40-45 mph winds.

For the majority of failures, evidence indicated that the top bolt failed first. Some posts ruptured with a zipper pattern along the side center line. Figure 3 is typical of this failure pattern. A number of posts were torn diagonally as though they failed due to torsional stresses, as shown in Figure 4.

During this investigation several concerns about the new small sign supports surfaced. The additional concerns can be grouped into three categories:

- Installation Problems
  1) Crew size
  2) Equipment (base post drivers)
  3) Sign Installation Alignment
  4) Extraction Problems (base post pullers or drive into ground)
  5) Component Parts (bolt spacing, bolt tightening, stub height)
- Acceptance Problems (Quality Assurance)

1) Yield Strength of U-channel Posts

2) U-channel Corrosion Inhibitors (Galvanizing)

- Design Problems

1) Post (nesting, cross-section variability, splice lap condition)

2) Spacer (size, strength, bearing area)

3) Signs too large for post size - new wind load chart.

Signing supervisors and workers have stated that it is difficult to install sign posts (with sign panel attached) to base posts on windy days. Two person sign crews would add a degree of safety and permit ease of installation of signs.

Other problems that maintenance workers have had are related to the base post. Maintenance workers have used a variety of devices to drive base posts into the ground. Not much success was had until hydraulic post drivers were purchased. Although the hydraulic post drivers have been helpful, they do not assist the worker in insuring alignment. Typically, maintenance workers have driven the posts into the ground approximately one foot and then checked the base for alignment with a torpedo level. The maintenance worker would then push or pull the base to straighten it and continue driving. The end result is that the signs are rarely plumb.

TABLE 2. REPORTED FAILURES

Dist.	No	Project Number	Project Name	Route	Beginning of Project	End of Project	Contractor	Sub-Contractor	Accept Date	NOTES
I	1	M600-9-501	Estrella Freeway	L303	Cactus Rd	Grand Ave	Pulice Construction	Safety Engineering		
	2	M600-9-502	Estrella Freeway	L303	Thomas Rd	Glendale	Busing Corp.	Barricades and Lights		34 single post supports failed
II	1	RS-577(1)P	Sierra Vista-Bisbee Hwy	SR 92	Buffalo Soldier Trail	CARR Canyon	FNF Construction	Steel Eagle Industries		All stop sign supports failed
	2	S-056-1-503	Why - Tucson Hwy	SR 86	Avra Valley Rd	Ryan Field	The Ashton Co.	Steel Eagle Industries	4/8/91	Some stop sign supports failed
	3	RS-347(13)P	Maricopa Road	SR 347	Queen Creek Tl	County Line	FNF Construction			
	4	RS-347(14)P	Maricopa Road	SR 347	County Line	SR 84	FNF Construction			7 stop sign supports failed
	5	S-038-1-501	Claypool - Jakes Corner Hwy	SR 88	Mile Post 242.73	Mile Post 245.00	Gibbons & Reed		8/22/91	No problems
	6	S-038-1-502	Claypool - Jakes Corner Hwy	SR 88	Near Roosevelt Lake	Bridge	Mordex Contracting		8/21/91	No problems
III	1			SR 69	Mile Post 281.00	Mile Post 286.00				
	2			SR 87	Mile Post 252.00	Mile Post 254.00		Fence Erectors		
IV	1	M-891-5(1)P	Show Low Airport Rd & Loop				H & S Construction			Installed without spacers, 40% of sign supports failed

FIGURE 3. ZIPPER PATTERN RESULTING FROM SIGN POST FAILURE

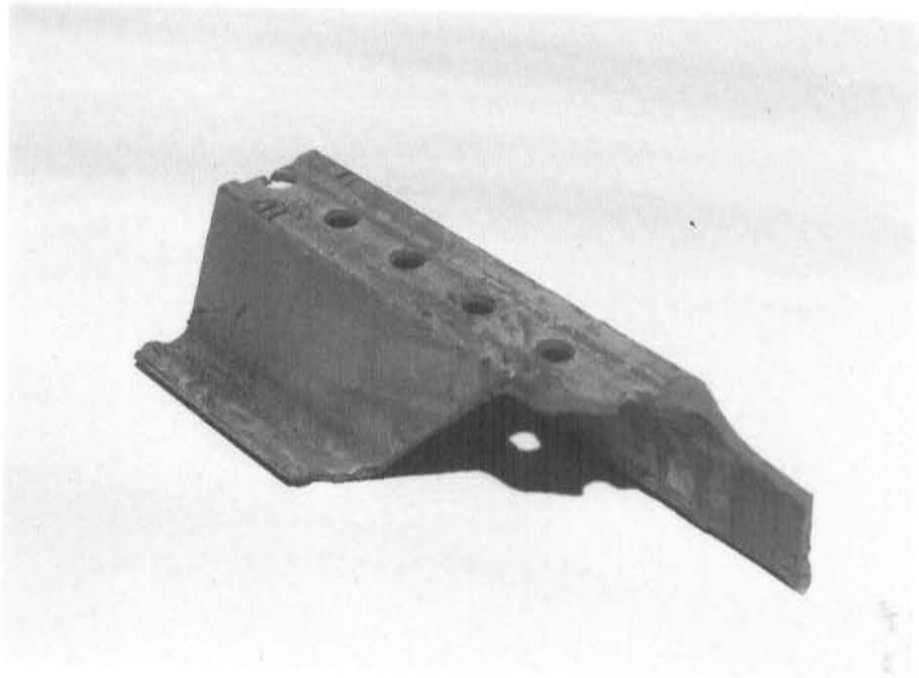

FIGURE 4. DIAGONAL TEARING RESULTING FROM SIGN POST FAILURE

Occasionally sign installers will encounter a cobble or rock that will deflect the base post or cause refusal. In this case the base must be pulled and relocated a short distance away. ADOT has purchased hydraulic pullers that work well, however the equipment must be used properly. The pullers grip the portion of the base that could be called the brim if the cross-section were to be viewed as a hat. This portion of the cross-section has a bulb (Marion posts) and is not an ideal geometry for gripping. Also, the puller has two legs and the grips are approximately 8" higher than the legs. This means that the maintenance workers, in some cases, have to excavate around the base post so that the puller grips will reach the base. There have been reports that when pulling base posts the U-channel steel has fractured.

An additional installation concern is the proper assembly of the splice. Spacing of the bolts is critical. Bolts have been spaced so that a maximum couple is developed while insuring that the installer will have a minimum of excavation. It appears contractors have been lax in insuring proper spacing (some bolts were spaced at 2" instead of the specified 3"). Proper tightening of the bolts is also a problem. If the assembly should become loose then the bolts are subject to fatigue failure. Because the bolts are extremely hard over tightening will shear the bolt off. Bolt specifications require 22 ft-lbs of torque for Grade 9 bolts

ADOT purchased 55,000 U-channel posts from Marion Steel for maintenance forces to apply the new small sign support standard. The posts from Marion Steel have had some yield strengths less than the minimum 80 ksi.

The U-channel selection chart (Figure 1) used to determine support configurations for a given sign panel is based on 60 mph wind speed. Reference 2 states that for roadside supports a 10-year mean recurrence interval may be used. Reference 2 shows a map of the United States indicating that for a 10-year recurrence interval the wind speed is 70 mph for most of Arizona. The selection chart was developed considering only the cross-section of the U-channel posts and not the splice. The splice has proven to be the critical component of the U-channel small sign support system.

The splice is composed of two U-channel posts (base and sign post) nested together and fastened with two Grade 9 bolts spaced 3" apart. Spacers are used to insure sufficient nesting without drawing the U-channel posts so close that bending occurs in the sides of the sign post. If posts are properly nested, torsion will be carried by the sides and bolts. If nesting is not complete the bolts will have to carry all the torsion.

The couple formed by the two bolts is transferred through the bearing area of the spacers. Spacers used by contractors have had minimum bearing areas and have deformed easily allowing the connection to become loose. As mentioned, once the connection is loose the bolts become subject to fatigue failure.

Construction Installations vs. Maintenance Installations

The two ways that a small sign support may be installed on an ADOT roadway are: 1) by contractors as part of a construction project, or 2) by ADOT maintenance forces. Many of the problems encountered to date have been from sign supports improperly installed by contractors and/or the use of signs larger than allowable on single sign supports. In general, contractors have interpreted the spacer specification on the U-channel standard drawing to mean that any tubular piece of metal with the correct dimensions is acceptable for a spacer. Contractors have used galvanized water pipe, electrical metallic tubing (EMT), and other types of spacers (Figures 5, 6, and 7).

As part of the implementation of the new small sign support standard ADOT purchased a hexagonal threaded spacer from Marion Steel (Figure 8). The hexagonal spacer is very different from the spacer used by TTI to test the U-channel system. TTI stacked flat washers until there was 1/16" space left between the base and sign post. The threading of the ADOT standard spacer could impair the tightness of the lap splice connection if the spacer is not properly torqued onto the bolt. Also, the threading of the spacer will cause non-uniformity of stresses in the bolt.

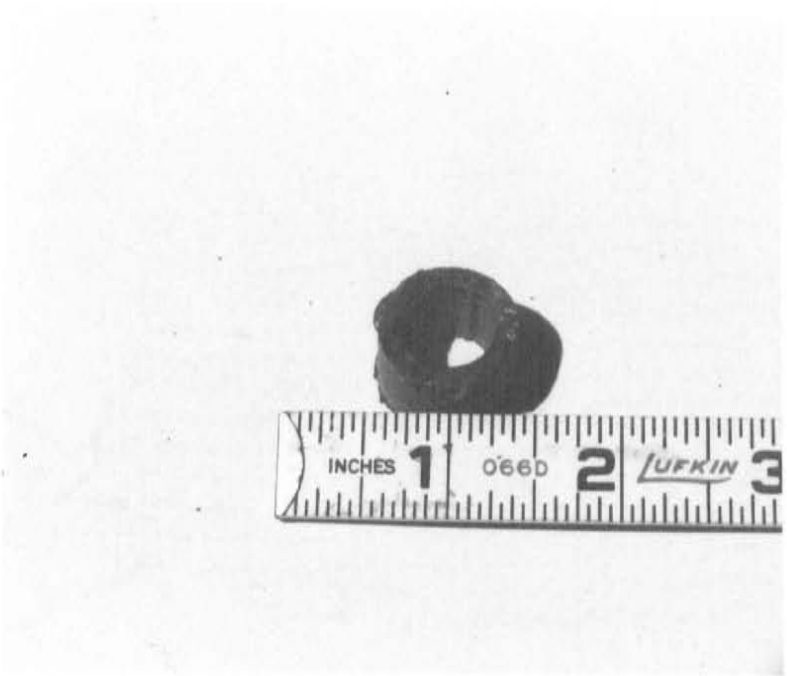

FIGURE 5. 5/8" INSIDE DIAMETER GALVANIZED WATER PIPE

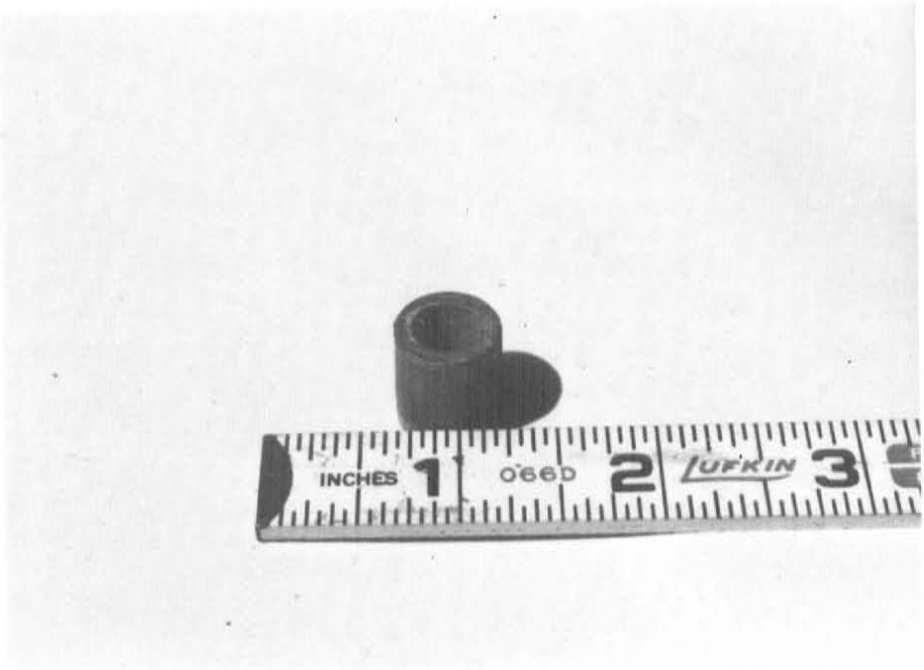

FIGURE 6. 3/8" INSIDE DIAMETER GALVANIZED WATER PIPE

FIGURE 7. 5/8" INSIDE DIAMETER ELECTRIC METALLIC TUBING

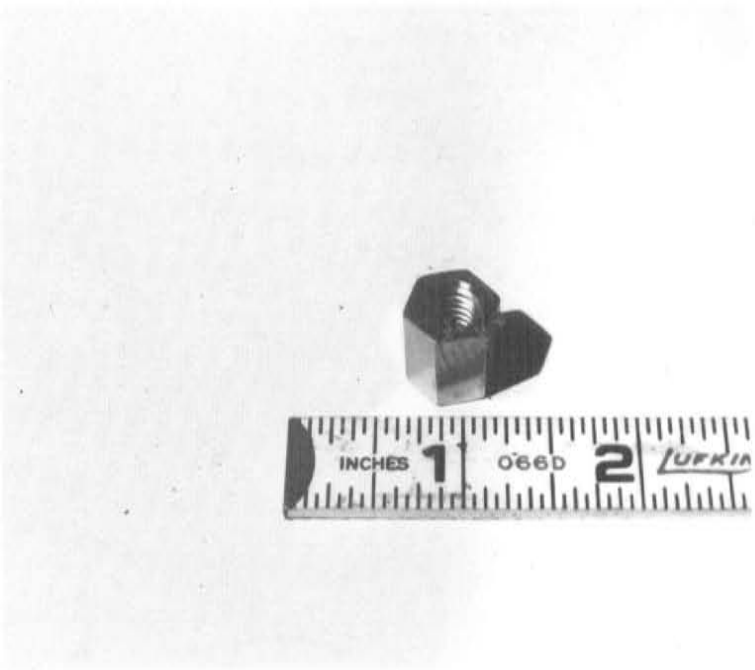

FIGURE 8. HEXAGONAL THREADED SPACER

U-channel Suppliers

Three suppliers responded to ADOT's request for bids on the U-channel procurement for maintenance use: 1) Marion Steel, 2) Franklin Steel, and 3) Chicago Heights Steel. Marion Steel is a scrap steel mill, while the other two suppliers are re-rolled rail steel mills. The steel produced from the Marion Steel scrap steel mill is called billet steel because the scrap steel is melted down and cast into billets. The billets are rolled into the desired shapes after they cool. Re-rolled rail steel mills use scrap railroad rail steel directly to form the desired cross-section. Scrap steel mills generally have a greater ability to control the chemistry of their steel. The ability to manipulate the steel chemistry makes the use of high strength steel (80 or 100 ksi) easier. For a re-rolled rail steel mill to produce high strength steel, they must locate special rails that were rolled for high strength steel. All the above mentioned steel mills are hot-rolled steel mills.

In addition to the differences in where the steel is obtained and how it is produced, there are minor differences in the cross-sectional geometry from the various manufactures. Marion steel has a patented U-channel design that incorporates a ribbed back. The ribbed back is

designed as a stiffener for the post. Franklin Steel and Chicago Heights Steel have identical cross-sections that have no stiffeners. Structural calculations (APPENDIX B) indicate that the back (the portion of the posts with the holes) of the U-channel at the splice is the critical portion of the section. Because the unit weight of the U-channel is fixed and Marion has elected to shift some steel to the ribs that leaves less steel for the back and may contribute to the zippering effect that has been observed.

Because all reported failures of U-channel posts have been on single post installations there has been concern about the flutter that signs experience during high winds. Flutter creates torsion in the splice. When there is a large amount of contact between the sides of the of the sign post and the sides of the base post, the torsion is taken by the U-channel posts and the bolts. When there is relatively little contact, the torsion must be carried by highly brittle Grade 9 bolts. This was known to the TTI researchers and is critical in selection of the proper length spacer. However, if there is large variability in the cross-sections then any length of spacer chosen may be either too short resulting in bending stresses in the side or too long resulting in lack of side to side contact. Cross-Section Drawings for each of the three suppliers are included in APPENDIX C.

PROJECT APPROACH

The small sign support study team began the investigation by meeting with ADOT maintenance personnel and assessing the small sign support failures. The initial indication was that the U-channel sign post material was too brittle. Therefore, it was decided to conduct physical property tests. Tensile coupon testing was conducted along with chemical analysis. These tests indicated that generally the chemistry of the steel was adequate and the yield point of some of the U-channel posts was slightly less than the required 80 ksi. Details of the tensile testing and chemical analysis were described in the following subsections "Tensile Testing" and "Chemical Analysis".

The lap splice was the next target of the investigation. The original TTI study used static bending, torsion, and combined bending and torsion tests to verify the wind load capacity of the system[4]. Therefore, combined bending and torsion static testing was conducted to verify the results of the original study and to compare the effects of various spacers that had been used by contractors. This static testing was conducted in a factorial experiment that included tightness of the connection as a factor. Some of the test specimens had the spacers loosely fitted in order to study the tightness effect. Details of the static testing were described in the following subsection "U-channel System Static Testing (Bending and Torsion)".

Structural analysis was performed (according to Reference 2) to determine the equivalent wind speed of the static testing. Indications were that even the loose connection of the U-channel sign supports could withstand a static wind load of approximately 100 mph. At this point, attention shifted to dynamic testing with the intention of simulating flutter experienced by single sign supports.

Initially only one load level was used in the dynamic testing. One ADOT system with two hexagonal threaded spacers and two 5/16" diameter Grade 9 bolts spaced at 3", one system with one 6" rectangular bar spacer with two 5/16" diameter Grade 8 bolts (less brittle than the Grade 9 bolts) spaced at 4", Franklin Steel 3 lb/ft Eze-Erect system, and a 3 lb/ft U-channel post with no splice were tested. The purpose of the dynamic testing was to compare the endurance limits of the different systems against torsional vibration under simulated wind loads. The U-channel post with no splice and the Franklin system were tested as bench marks. Because of budget limitations on the dynamic testing and the fact that the post with no splice withstood a very high load cycle without showing any sign of damage, no additional test was performed on the post with no splice. There was a large variance associated with the test results of the other three systems but the number of load cycles at failure indicated that the dynamic load level was high. Therefore, two additional lower load levels were selected for further testing. Because of the relatively poor performance of the ADOT system and the bar spacer system with 5/16" diameter bolts, and again because of budget limitations these two systems were removed from testing. A new system consisting of one 6" rectangular bar spacer with two 3/8" diameter, Grade 8 bolts spaced at 4" was subsequently introduced in their place. Details of the dynamic testing were described in the following subsection "U-channel System Dynamic Testing".

Structural analysis was also conducted to investigate stresses in the U-channel posts under wind load. Additionally structural analysis was performed to determine sign post stress levels for pilot studies. Structural analysis results were described in the subsections "U-channel Selection Chart" and "Effect of Size and Spacing of Spacers on Stresses in Posts" under the section "IDENTIFIED PROBLEMS".

The final phase of the investigation was the pilot studies. Single sign posts with different splice configurations supporting sign panels of 24" x 24", 30" x 30", and 36" x 36" representing 50%, 100%, and 200% design stress level were installed at two ADOT maintenance yards. The purpose of the pilot studies was to obtain field data on the performance of the different splice configurations. The signs have wind gages for wind speed tracking. Signs for pilot studies were also installed on an ADOT highway. Details of the pilot studies are described in the following subsection "Pilot Studies".

While physical tests and structural analysis were being conducted, information was gathered from the four ADOT districts regarding the extent of the small sign support problem.

The investigation proceeded by asking District Traffic Engineers to furnish information about the sign post failures. The U-Channel post failure survey form is shown in APPENDIX D. From this information the locations of projects where the U-channel posts had been used and were failing are shown in Table 2.

A field visit was made to one project where the new small sign support standard had been implemented. This project was located on the Estrella Freeway (Loop 303) and indicated that the majority of signs had been improperly installed. Some of the problems are shown in Figures 9, 10, 11, 12, and 13.

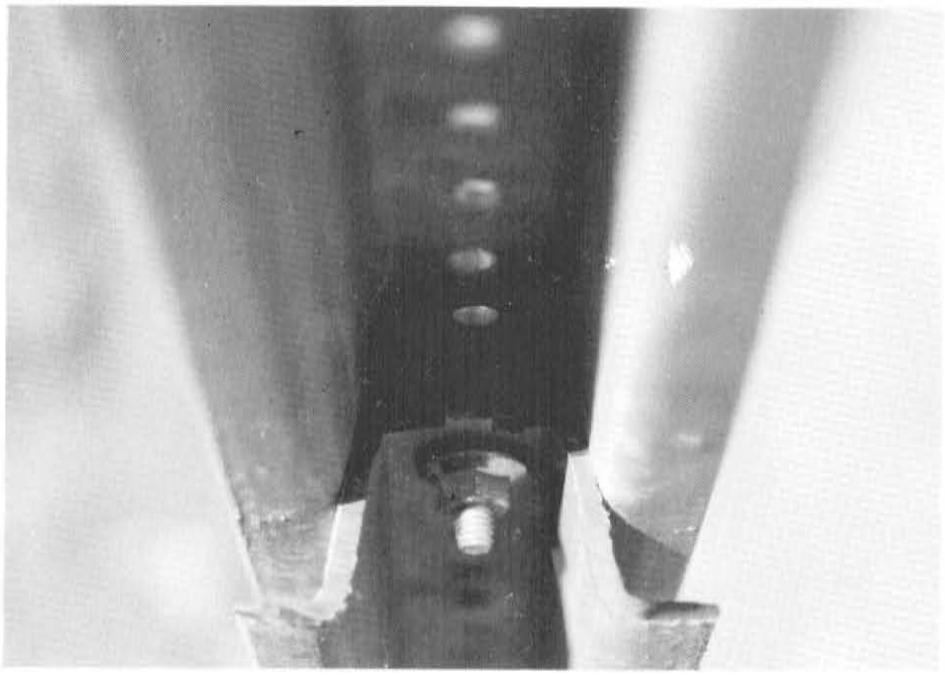

FIGURE 9. PROBLEM: FRANKLIN EZE-ERECT NUT USED INSTEAD OF ADOT STANDARD NUT

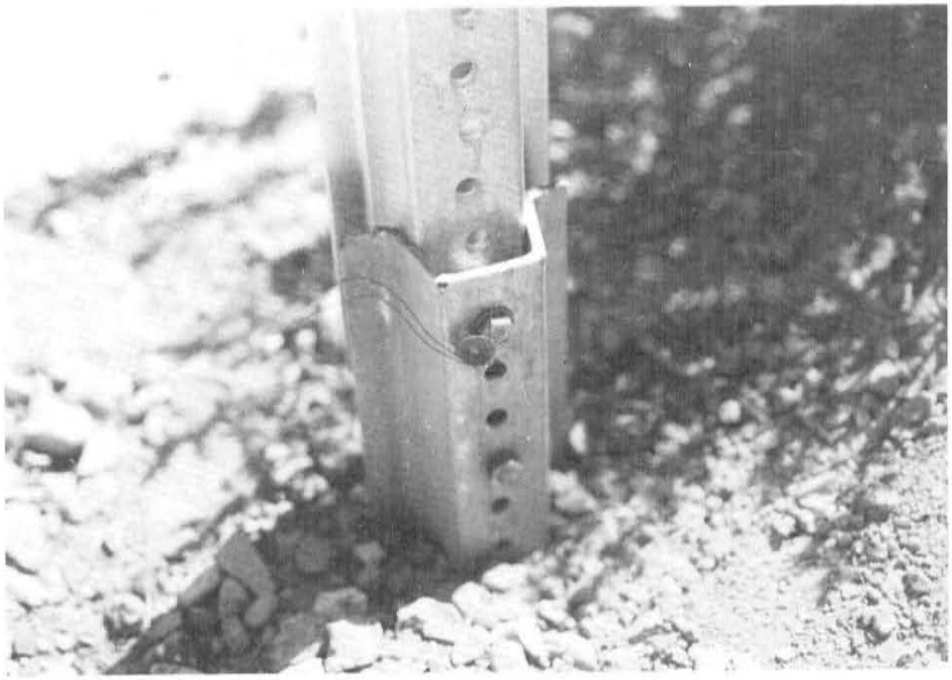

FIGURE 10. PROBLEM: POST ON WRONG SIDE OF STUB

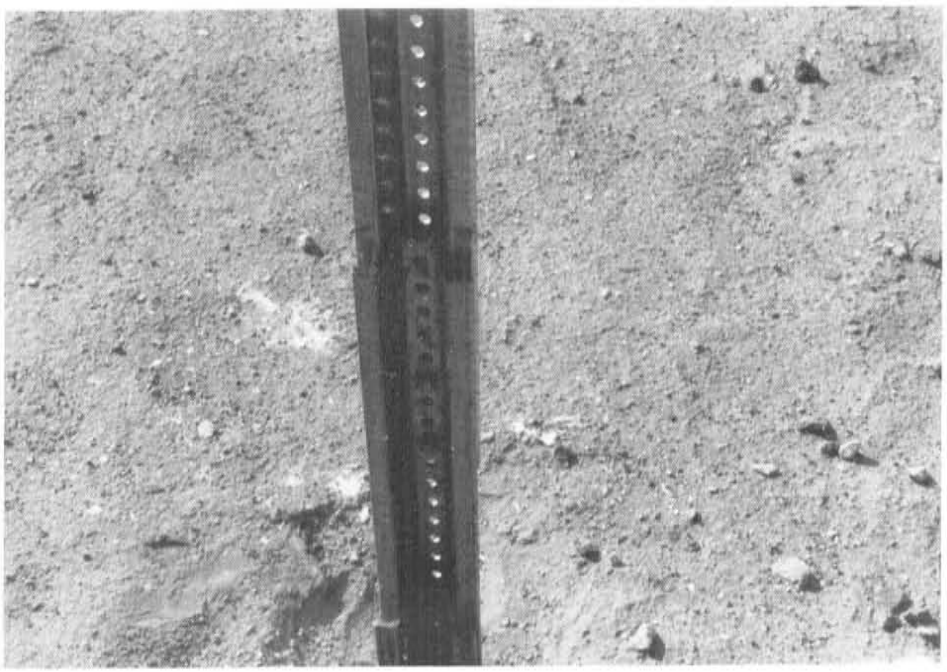

FIGURE 11. PROBLEM: NON-STANDARD SPLICE

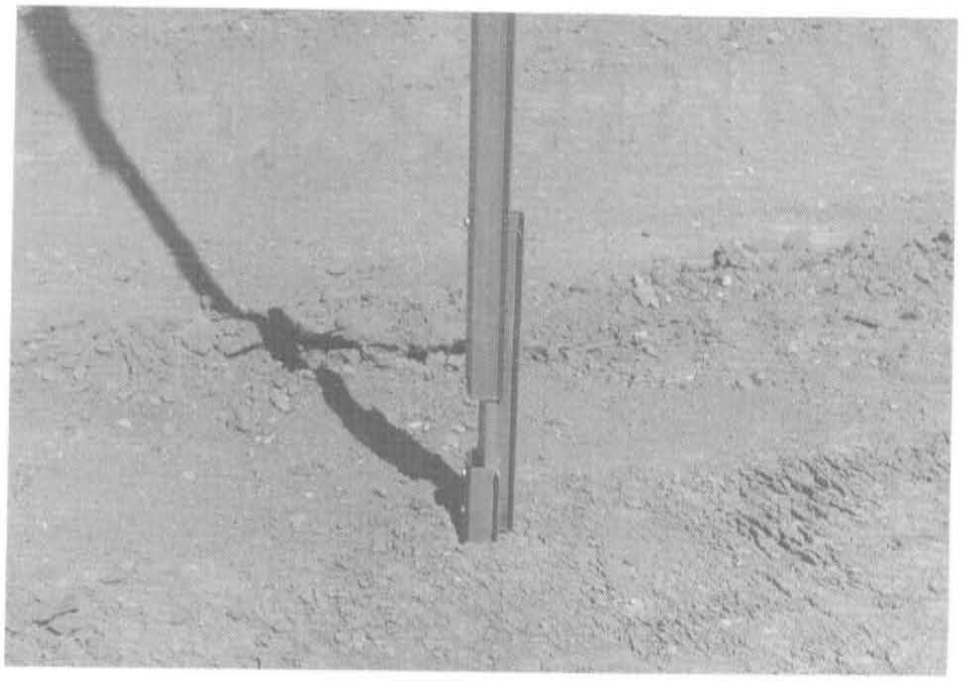

FIGURE 12. PROBLEM: NON-STANDARD SPLICE

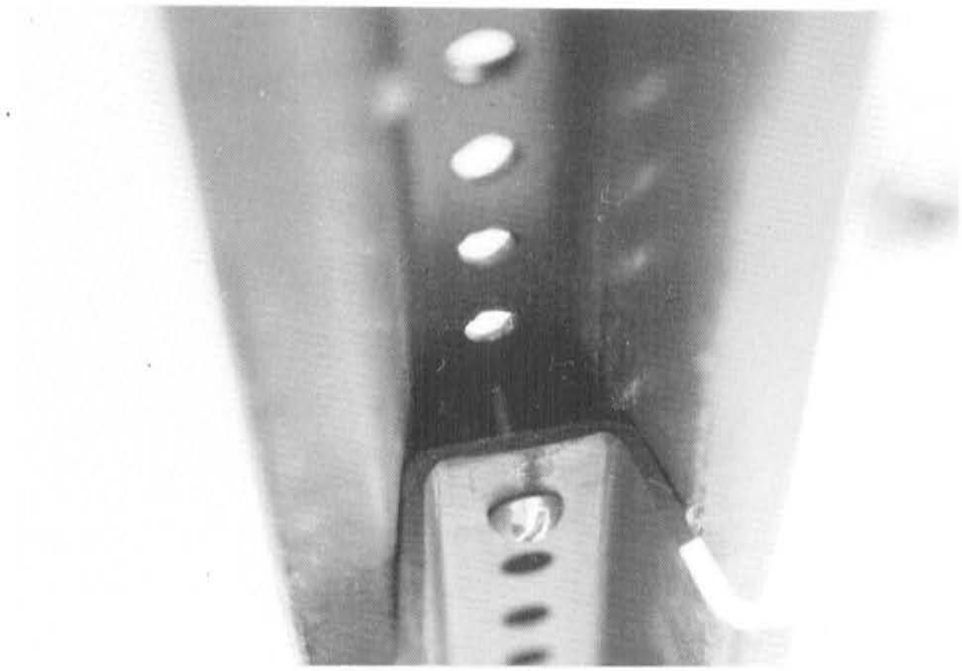

FIGURE 13. PROBLEM: NO SPACER, WRONG BOLT

Short Term vs. Long Term Strategy

ADOT purchased 55,000 U-channel posts from Marion Steel for use by maintenance forces as part of the implementation of the generic lap splice U-channel small sign support. The ownership of these posts has necessitated that ADOT develop a short term strategy and a long term strategy. This report is the fruition of the short term strategy, which was to determine the cause of the failures and determine a remedy that includes using the purchased U-channel posts. The long term strategy is to determine the most cost effective sign post system available for future use. The long term strategy will be to evaluate all available small sign support systems including:

- Franklin Eze-Erect
- Marion Minute Man
- P1 and P2 Posts
- ADOT Generic Lap Splice
- Marion Steel Lap Splice

The long term strategy includes crash testing in accordance with NCHRP Report 230 as required for any system that is chosen. The long term strategy also includes pilot testing to insure that any system chosen has a minimum amount of field testing. Training of ADOT maintenance workers and construction inspectors is also necessary.

Tensile Testing

The tensile testing for the small sign support investigation was conducted by TTI in October, 1991. The purpose of the tensile testing was to determine if the yield point of the Marion Steel 3 1b/ft U-channel posts met the 80 ksi minimum. Twelve Marion Steel post specimens were randomly selected and shipped to TTI for testing. Four Marion Steel post specimens taken from the TTI scrap yard were also tested for comparison purposes. Table 3 shows the test data. Figures 14 through 17 show the nominal stress vs. strain curves.

The nominal stress vs. strain curves from the TTI tensile testing indicated that the yield points of the specimens were either at or below the minimum yield point of 80 ksi. Therefore, further testing was conducted by Western Technologies Incorporated (WTI) later in the same month. Altogether, 8 Marion Steel post specimens were tested. Table 4 shows the test data. As indicated in the table, some specimens are less than the minimum 80 ksi.

Coupon tensile tests of the U-channel posts (rated at 80 ksi) used by TTI in the development of the generic small sign support system indicated a yield point of 107 ksi[4].

TABLE 3. U-CHANNEL COUPON TENSILE TEST DATA (TTI)

Specimen Number	Width (inches)	Thickness (inches)	Load (kips)	Maximum Stress (ksi)
M1	0.4989	0.1382	9.15	132.80
M2	0.5005	0.1416	9.28	130.89
M3	0.4994	0.1460	9.47	129.90
M4	0.4992	0.1425	9.28	130.52
M5	0.5015	0.1409	9.27	131.12
M6	0.5029	0.1441	9.50	131.03
M7	0.5000	0.1436	9.47	131.89
M8	0.5000	0.1414	9.26	130.98
M9	0.5028	0.1424	9.35	130.59
M10	0.4997	0.1449	9.39	129.70
M11	0.5001	0.1455	9.28	127.47
M12	0.5011	0.1410	9.24	130.69
M13	0.4986	0.1700	10.31	121.58
M14	0.4984	0.1607	9.73	121.47
M15	0.5000	0.1690	11.24	133.02
M16	0.5005	0.1601	10.82	135.08

NOTE:
1) Test procedure: ASTM 370
2) Specimens M1 through M12 are Marion 3 lb/ft post specimens and were galvanized.
3) Specimens M13 through M16 were taken from the TTI scrap yard and were painted.
4) M13 and M14 are Marion 3 1b/ft post specimens.
5) M15 and M16 are Marion 4 1b/ft post specimens.
6) Thickness includes galvanizing or paint.

TABLE 4. U-CHANNEL COUPON TENSILE TEST DATA (WTI)

Specimen No.	1	2	3	4	5	6	7	8
Size	Short	Short	Short	Long	Long	Long	Long	Long
Area (sq. in.)	0.1957	0.2039	0.2007	0.2153	0.2223	0.2203	0.2131	0.1776
Yield Pt. (lbs)	18,300	18,150	17,790	19,350	17,330	17,180	18,470	14,790
Yield Pt. (psi)	93,490	89,020	88,620	89,880	77,990	78,000	86,690	83,250
Tensile Strength (lbs.)	28,700	29,870	29,120	30,900	28,750	28,750	23,010	25,170
Tensile Strength (psi)	146,600	146,500	145,100	143,500	129,400	130,500	108,000	141,700
Gauge Length (inches)	2.000	2.000	2.000	2.000	2.000	2.000	2.000	2.000
Final Length (inches)	2.141	2.201	2.133	2.106	2.233	2.240	2.070	2.207
Elongation (%)	7.05	10.05	6.65	5.30	11.65	12.00	3.50	10.35

NOTE
1) Test procedure: ASTM 370
2) Elongation percents were based on a two-inch gauge level
3) Short indicates base post, long indicates sign post

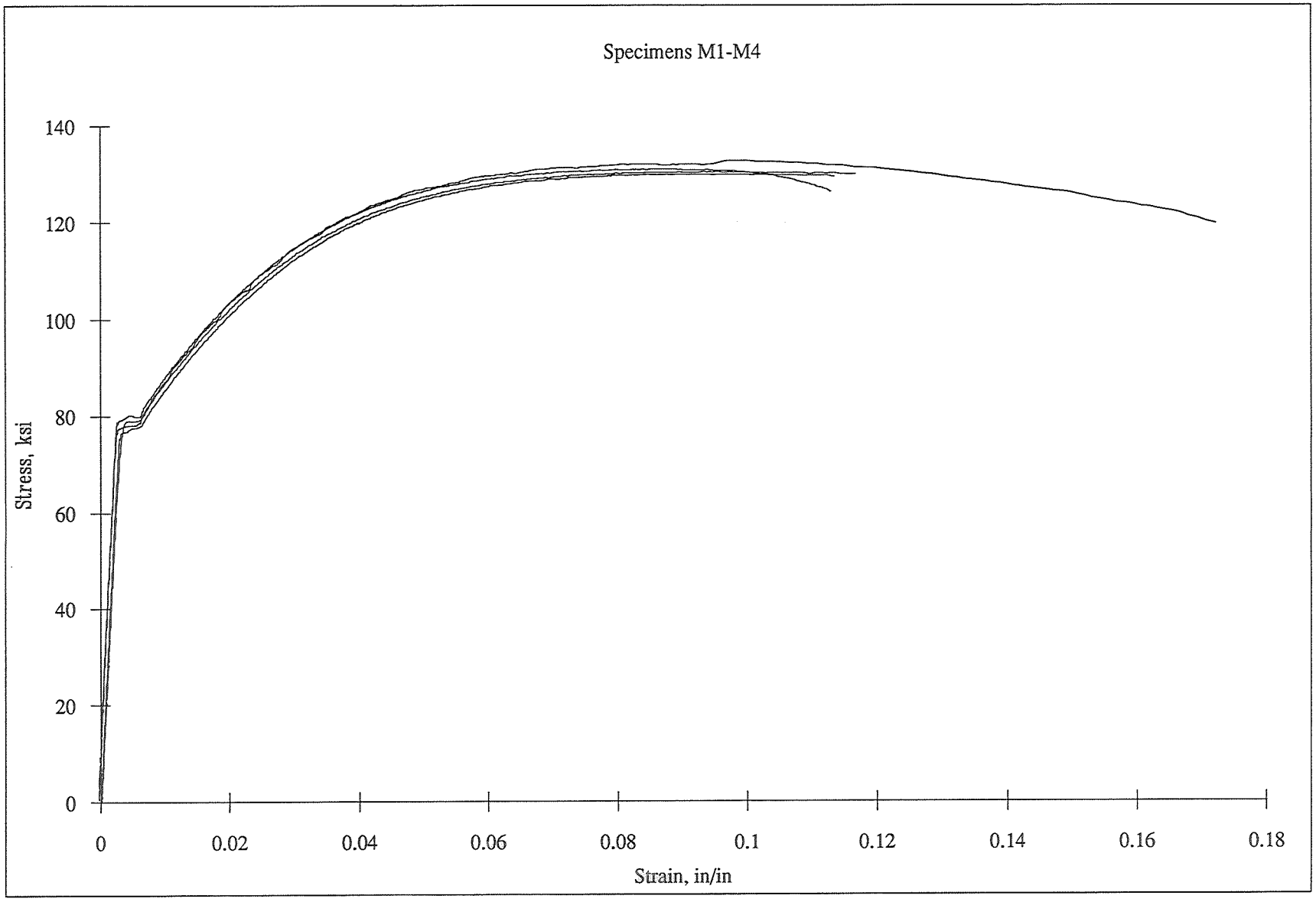

FIGURE 14. NOMINAL STRESS VS. STRAIN CURVES FROM TTI TENSILE TESTING FOR SPECIMENS M1-M4

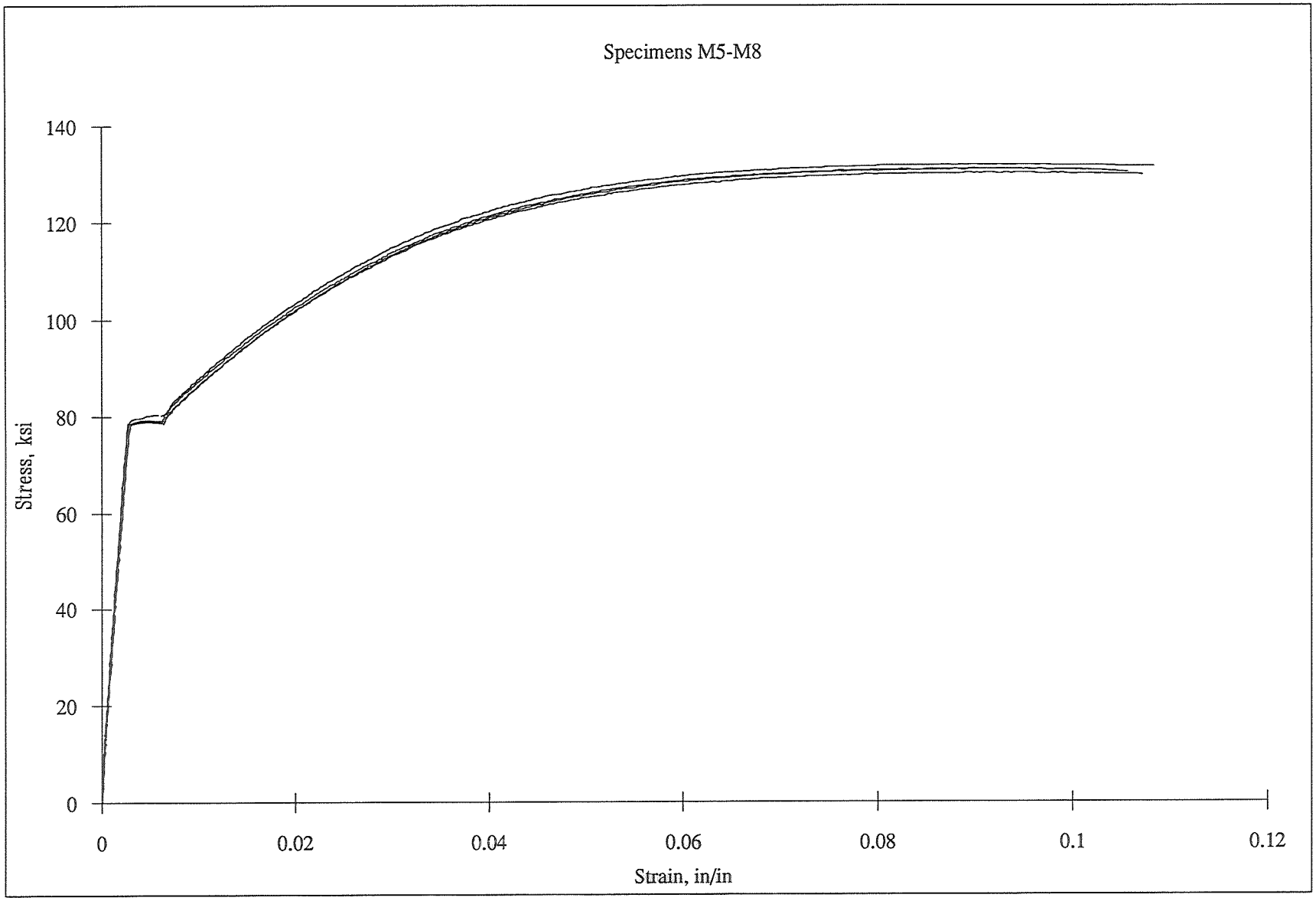

FIGURE 15. NOMINAL STRESS VS. STRAIN CURVES FROM TTI TENSILE TESTING FOR SPECIMENS M5-M8

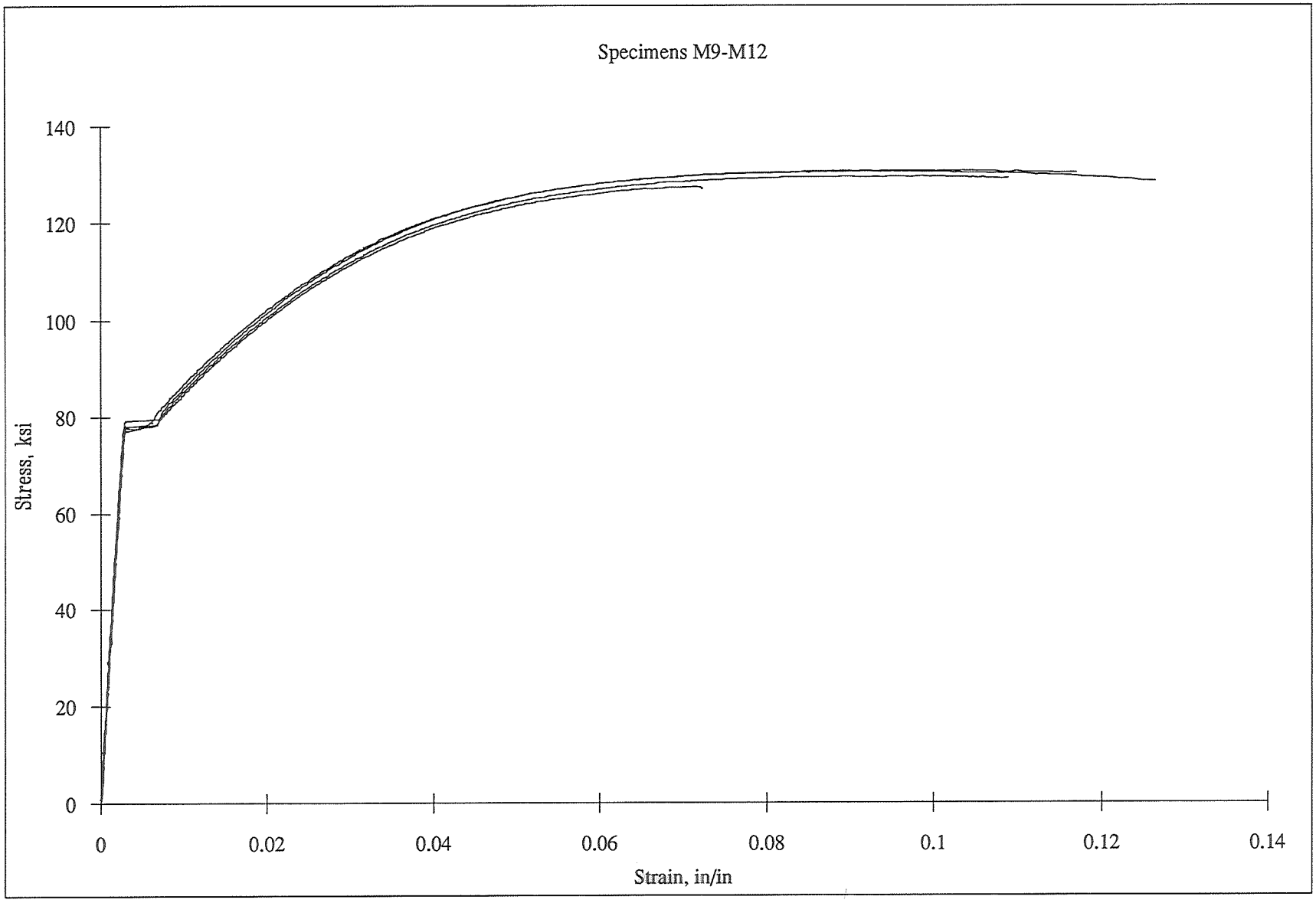

FIGURE 16. NOMINAL STRESS VS. STRAIN CURVES FROM TTI TENSILE TESTING FOR SPECIMENS M9-M12

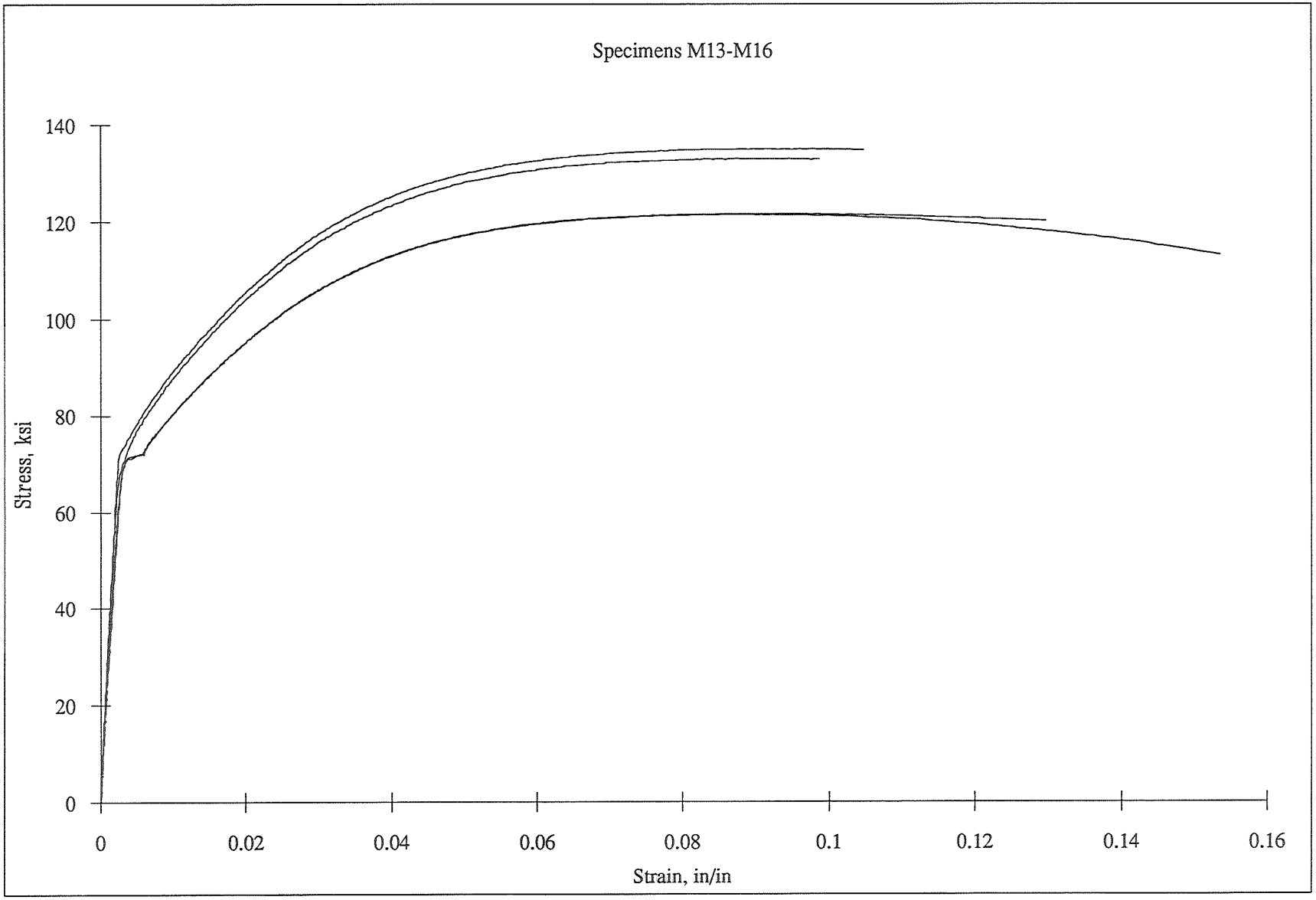

FIGURE 17. NOMINAL STRESS VS. STRAIN CURVES FROM TTI TENSILE TESTING FOR SPECIMENS M13-M16

Vendor Participation

As part of the investigation U-channel suppliers (Franklin Steel and Marion Steel) were contacted and asked for their input. U-channel specimens were sent to Marion Steel and Franklin Steel. Franklin Steel representatives came to Arizona and gave a presentation to ADOT in October of 1991. They felt that the 80 ksi steel was too brittle and that the lap splice was not sufficient to transfer torsion. A Marion Steel Representative came to Arizona in November of 1991 and discussed the problems with ATRC staff working on the small sign support project. The Marion Steel representative felt that improper installation was the major problem and offered to conduct training in each of the four ADOT districts.

Cross-Section Variability

As stated, all U-channel small sign support failures that have occurred due to wind loading have been single support installations. Single sign supports are subject to flutter and subsequently torsion. The contact between base post and sign post sides is required if torsion is to be carried by the U-channel posts.

A field evaluation was performed to determine if contractor installed sign supports had any contact between the base and sign post. Measurements were taken to determine the variability of in-service U-channel sign support systems.

To determine if the variability inherent in U-channel posts was such that the nesting concept was not feasible, a random sample of U-channel posts was selected for measurements (see APPENDIX E). Manufacturers of U-channel posts were contacted to determine mill tolerances.

Representatives of Franklin Steel stated that the U-channel posts are formed by rollers. These rollers are constantly wearing, and may need to be changed even over the course of one day. After the steel is rolled at temperatures of approximately 1900 degrees Fahrenheit, it is placed on a notched bed for cooling at a temperature of between 500 and 600 degrees Fahrenheit. Any differential cooling that takes place will induce variation in section dimensions. The U-channel posts are rolled when cool to straighten them. After the section is straightened then it is sheared to length.

When asked to send a cross-section drawing that gave the tolerances for each dimension of the cross-section, Franklin steel stated that: "It has been difficult to determine the range of variability you asked for, but I have shown on the drawing the internal tolerances we use on overall width, flange to flange. The other dimensions should be considered nominal and will vary slightly from rolling to rolling. The weight per foot of the section is the normal control element from a rolling standpoint and that tolerance for Franklin is plus or minus five percent."

The tolerance on the flange to flange width mentioned is plus or minus 3 percent. Franklin Steel also stated that cross-section tolerances are not small enough to allow side to side contact in all cases. Therefore, it is not reasonable to expect torsion to be carried by side to side contact.

Information supplied by Marion Steel indicates that the rolling process is similar. The cross-section variability indicated is approximately the same.

Chemical Analysis

A laboratory chemical analysis was conducted by Franklin Steel Company in October, 1991. The purpose of the chemical analysis was to investigate the chemical composition of the Marion Steel 3 1b/ft U-channel posts, and to see whether the chemical composition of these posts met the requirements stated in Article 607-2.04 of the 1990 ADOT Standard Specifications for Road and Bridge Construction (shown in Figure 2). Eight Marion Steel post specimens were analyzed. Three Franklin 3 1b/ft post specimens were also analyzed for comparison purposes. Table 5 shows the ADOT specified chemical composition requirements and Table 6 shows the chemical analysis results.

TABLE 5. ADOT CHEMICAL COMPOSITION REQUIREMENTS FOR 3 1B/FT U-CHANNEL POSTS

ELEMENT	COMPOSITION (%)
Carbon	0.67 - 0.82
Manganese	0.70 - 1.10
Phosphorus, Max.	0.04
Sulfur, Max.	0.05
Silicon	0.10 - 0.25

TABLE 6. RESULTS OF CHEMICAL ANALYSIS OF U-CHANNEL POSTS (SHOWING PERCENTAGE OF ELEMENTS)

Specimen Number	1	2	3	4	5	6	7	8	9	10	11
Carbon	.68	.73	.78	.76	.75	.75	.75	.67	.71	.70	.76
Manganese	.84	.84	.98	1.02	.94	.94	.91	.95	.92	.86	.91
Phosphorus	.012	.023	.025	.014	.012	.012	.011	.014	.012	.013	.022
Sulfur	.032	.034	.014	.046	.040	.040	.041	.042	.040	.029	.045
Silicon	.16	.21	.23	.25	.21	.21	.21	.23	.22	.26	.23
Chromium	.03	.03	.18	.13	.09	.09	.09	.10	.09	.09	.12
Nickel	.01	.01	.02	.16	.11	.11	.11	.12	.11	.17	.12
Molybdenum	.01	.01	.01	.03	.02	.02	.02	.02	.02	.02	.02
Copper	.05	.01	.01	.47	.34	.34	.33	.37	.34	.39	.42

NOTE: Specimen Numbers 1 through 3 are Franklin Post specimens.
Specimen Numbers 4 through 11 are Marion Post specimens.

Except for the silicon content in Specimen No. 10, which is slightly above the maximum amount allowed, all the specimens met the chemical composition requirements.

U-channel System Static Testing (Bending and Torsion)

Static testing was conducted by TTI in November, 1991. The purpose of the static testing was to investigate the static load carrying capacity of the Marion Steel 3 1b/ft U-channel posts with a 5" lap splice (3" bolt spacing) using different spacers and different bolt torques. Results of the static testing were used to verify the test results of the original TTI research[4].

Base and sign posts were randomly selected from ADOT's District I supply. The posts and the necessary hardware were subsequently shipped to TTI. An ADOT representative traveled to Texas to observe the testing.

The static testing was performed by placing the base post in a large clamp so that the bottom of the splice was 3" from the clamp (Figure 18. The load was applied 9' from the clamp with a 7.2" eccentricity (Figure 19). The U-channel was laid facing down and the load was applied by a variable speed motor (hanging from rafters) at a rate of 0.404"/second. A load cell was placed between the post and the crane for continuous monitoring of load. Loading was continued until failure. Figure 20 shows the sign support under load.

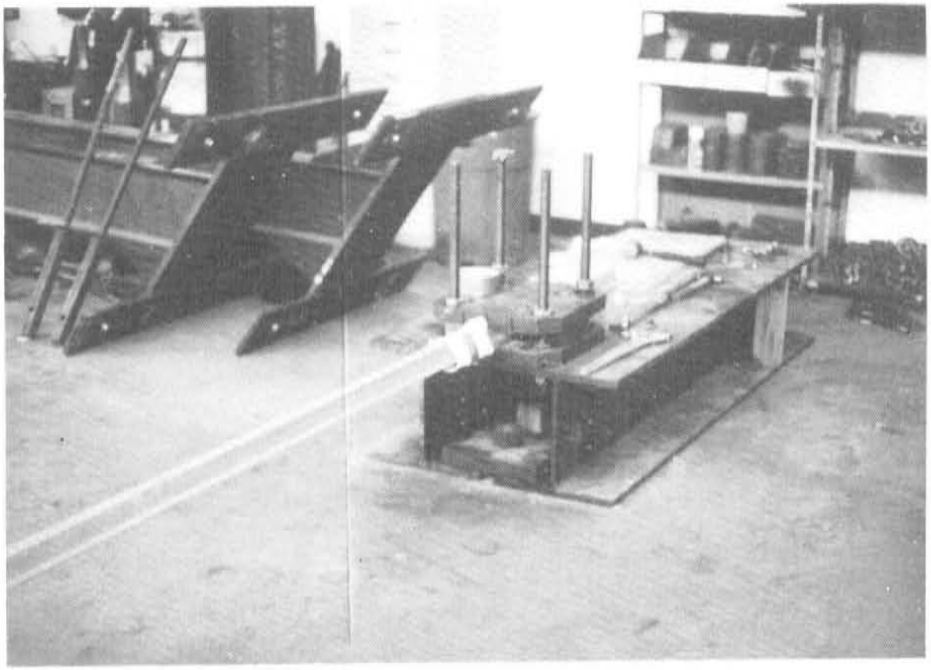

FIGURE 18 FIXED END AND SPLICE

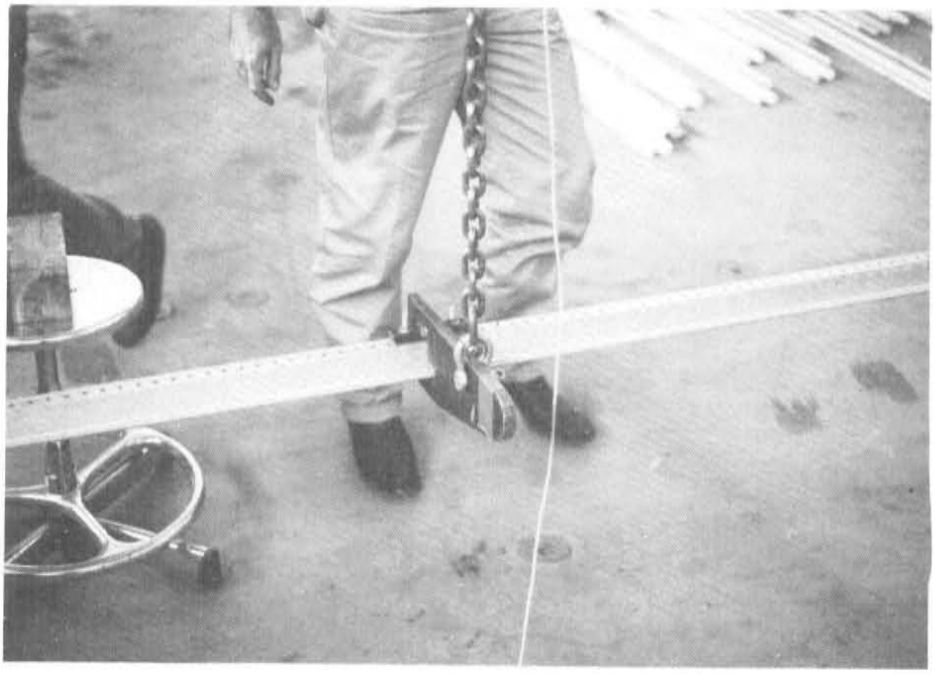

FIGURE 19 DEVICE USED TO APPLY STATIC BENDING AND TORSION

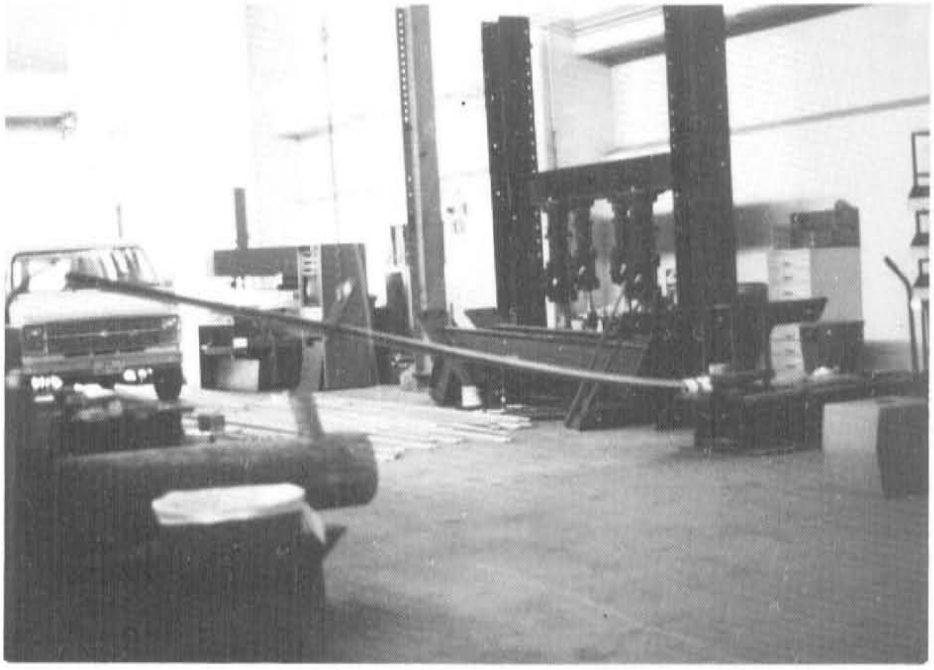

FIGURE 20. U-CHANNEL SMALL SIGN SUPPORT UNDER LOAD

All bolts used for the testing were 5/16" diameter Grade 9 and were spaced at 3". Twenty-eight sign support specimens were tested in a factorial experiment. The twenty-eight specimens were divided into six splice configuration groups:

1) Post with one 1/2" thick x 3/4" wide x 5" long steel bar spacer at the splice with two bolts.
2) Post with two hexagonal threaded spacers tightly fitted at the splice.
3) Post with two hexagonal threaded spacers loosely fitted at the splice.
4) Post with two spacers cut from 1/2" diameter, galvanized water pipe at the splice.
5) Post with two spacers cut from 3/4" diameter galvanized water pipe at the splice.
6) Post with two TTI spacers (3/4" diameter x 1/2" thick) at the splice.

All the posts failed by tensile failure of the top bolt. Table 7 shows the test results. Structural calculations (APPENDIX F) indicate that the minimum load of 330 lb. was equivalent to a "static" wind load of approximately 100 mph speed on a 30" x 30" sign; or if the wind speed were 70 mph, the factor of safety of the post against wind load would be about 2. Also the maximum bending stress in the base post was larger than the specified yield stress of 80 ksi, which confirms the statement from Reference 4, that for Marion Steel 3 1b/ft posts with Grade 9 bolts spaced at 3 inches, the splice will develop the nominal yield stress of the posts.

U-channel System Dynamic Testing

The dynamic testing was conducted by TTI between December, 1991, and February, 1992. The purpose of the dynamic testing was to compare the endurance limits against torsional vibration for several types of lap splices under simulated wind loads.

The dynamic testing setup was the same as the static testing except that a shaker was placed 9 ft. from the point of fixation (Figure 21). The shaker consists of a motor that drives two rotating masses (Figure 22). During the test the two masses spin in opposite directions to simulate a wind load. The spinning of the masses caused the post to respond with a twisting vibration. The post was also subjected to bending due to the weight of the shaker, which was about 100 pounds. The rate of load cycle (cycle of spinning of the massess) was set at 4 cycles per second.

The level of dynamic load acting on the post was adjusted by changing the weight of the massess. Three levels of dynamic load were applied. For the high dynamic load level, each mass consisted of a 2 inch diameter x 6 inch steel sleeve over a 1 inch diameter x 7 inch steel pin. For the medium load level, 2 inch diameter x 6 inch aluminum sleeves were used instead of

TABLE 7. STATIC TEST RESULTS

Post Group (see p.28)	Number of Specimens	Load at Failure (Pound)	Average Load at Failure (Pound)	Deflection at Loaded End (Inches)	Avg. Deflection at Pt. of Loading (Inches)
1	8	427 373 455 388 452 407 397 429	416	33.6 24.0 30.6 26.6 28.8 27.4 29.0 29.6	28.7
2	4	371 373 338 365	362	29.4 28.4 25.8 28.6	28.1
3	4	338 368 336 335	344	28.8 29.8 28.4 28.6	28.9
4	4	358 330 363 363	354	28.8 27.0 28.0 29.2	28.3
5	4	369 353 332 365	355	27.4 23.6 26.6 27.6	26.3
6	4	350 366 364 376	364	25.2 26.6 26.4 26.2	26.1

steel sleeves for the medium dynamic load level. For the low dynamic load level, no sleeve was used. Direct correlation between the spinning masses and wind speed is not possible.

Thirty-five sign post specimens were tested from five groups:

1) ADOT standard posts with two hexagonal threaded spacers and two 5/16" diameter, Grade 9 bolts at 3 inch spacing.
2) ADOT post with one 1/2" thick x 3/4" wide x 6" steel bar spacer and two 5/16" diameter, Grade 8 bolts at 4 inch spacing.
3) ADOT post with one 1/2" thick x 3/4" wide x 6" steel bar spacer and two 3/8" diameter, Grade 8 bolts at 4 inch spacing.
4) Franklin post with two 3/8" diameter, Grade 8 bolts at 4 inch spacing.
5) Post with no splice (Marion Steel Post)

All spliced posts failed by breaking of one of the two bolts. With the weight of the shaker acting downwards, the critical position of the ADOT posts was when the flanges were facing up. For the Franklin posts, the critical position was when the flanges were facing down. The difference in critical position between the ADOT posts and the Franklin posts is probably due to the effect of the special spacer strap in the Franklin posts. The unspliced post withstood 187,480 load cycles before the motor was stopped. The post did not show any sign of damage. Table 8 shows the test results.

The ratio of load cycles (Number of revolution of the masses) to response cycles (Number of a complete movement of the post) at a given time varies with the level of load. Approximate ratios are 1:1 for the low load level; 3.87:1 for the medium load level; and 4.32:1 for the high load level. Once this is factored into the data, the results will show the expected trend of longer fatigue life with decreasing load level.

Under each dynamic load level and within each post group, there was generally a wide variation among the numbers of load cycles at post failure. The Franklin post system had the best performance, followed by the ADOT post system with bar spacer and 3/8" diameter, Grade 8 bolts, then the ADOT post system with bar spacer and 5/16" diameter, Grade 8 bolts, and finally the standard ADOT system with hexagonal threaded spacers. It is possible that if designed with 70 mph wind load and properly installed, the ADOT single sign posts can perform satisfactorily under design wind load. However, this possibility could not be proven by the dynamic testing.

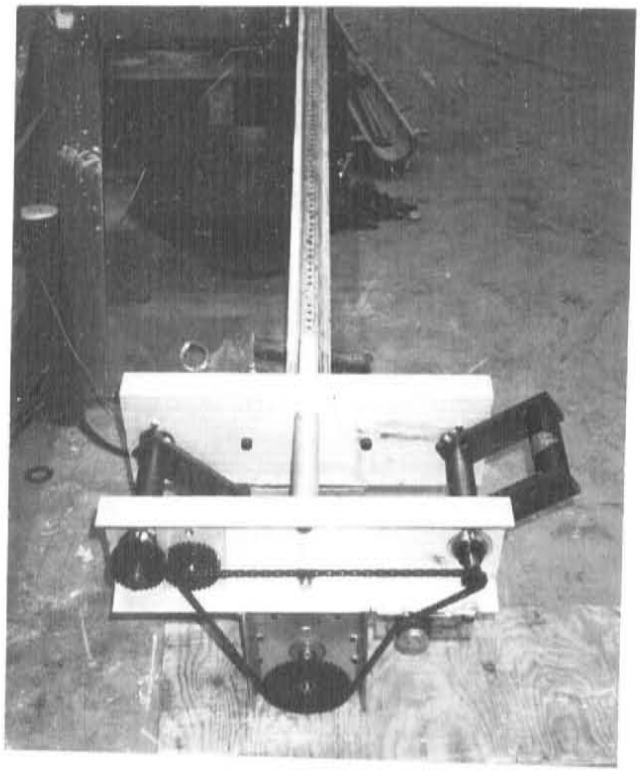

FIGURE 21. U-CHANNEL POST DYNAMIC TEST SET UP

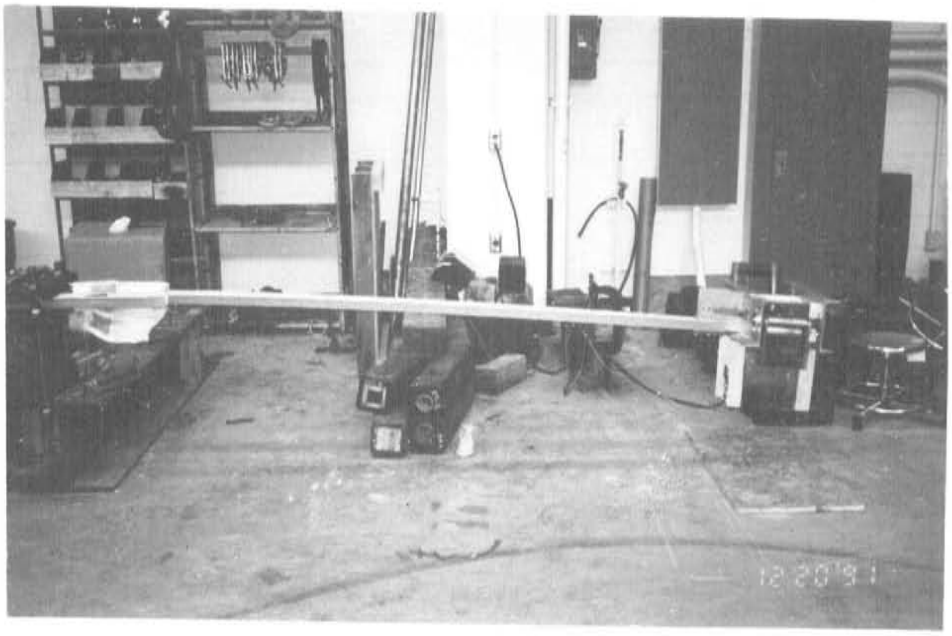

FIGURE 22. SHAKER AT END OF POST

TABLE 8. DYNAMIC TEST RESULTS

Dynamic Load Level	Post Group (see p.30)	Position of Post	Number of Tests	Number of Load Cycles to Failure	Avg. Number of Load Cycles to Failure	Range of Load Cycles
High	1	Flanges facing down	4	4,880 5,080 8,880 10,280	7,280	5,400
High	1	Flanges facing up	3	2,640 5,640 7,240	5,170	4,600
High	2	Flanges facing down	3	10,360 15,240 25,560	17,050	15,200
High	2	Flanges facing up	3	3,360 6,520 9,640	6,510	6,280
High	3	Flanges facing up	3	11,040 11,760 13,920	12,240	2,880
High	4	Flanges facing down	3	10,680 14,640 16,560	13,960	5,880
High	4	Flanges facing up	3	20,320 23,720 71,640	38,560	51,320
High	5	Flanges facing down	1	Test was stopped after 187,480 load cycles	Test was stopped before failure	Only one test was conducted
Medium	3	Flanges facing up	3	22,800 32,640 40,320	31,920	17,520
Medium	4	Flanges facing down	3	29,760 96,960 111,360	79,360	81,600
Low	3	Flanges facing up	3	13,440 20,160 44,160	25,920	30,720
Low	4	Flanges facing down	3	42,000 43,200 191,520	92,240	149,520

NOTE: **The numbers of load cycles to post failure are listed in ascending order and not in order of testing.**

Pilot Studies

Pilot studies, or field installations, of various U-channel lap splices have been installed in Arizona in an effort to gain some field performance data. To date, two pilot studies have been installed in maintenance yards and one on an ADOT highway.

The two maintenance yard pilot studies are located at the Interstate Signing Yard, and at the Gray Mountain Maintenance Yard. The highway pilot study signs are located on Loop 303 between Thomas and Glendale roads.

The pilot study in the Interstate Signing and Striping Yard consists of 15 signs with 5 different splices, all with the center of the sign 8.5' above ground level. Each splice configuration is stressed at three levels by varying the sign panel sizes. Table 9 shows the experimental setup and corresponding stress levels for each sign.

The pilot study at the Gray Mountain Maintenance Yard is the same as the Interstate Signing Yard, except that the bar spacer with 5/16" Grade 9 bolts has been eliminated. There are 13 signs at this location consisting of the 12 just mentioned, plus one additional sign with an ADOT standard splice (hexagonal thread spacers, two 5/16" diameter Grade 9 bolts spaced at 3") at the lowest stress level.

The signs at the Interstate Signing Yard are oriented toward the East. The signs at Gray Mountain Maintenance yard are oriented toward the Southwest. Each of the Maintenance Yards have been instrumented with a wind gage. The maximum peak gust information is captured and stored by each of the gages. The wind speed information is gathered periodically and incorporated into the Small Sign Support test results database.

To date the Interstate Signing Yard has had a maximum peak gust wind speed of 41 mph ESE. The Gray Mountain signs have had a maximum peak gust wind speed of 51.5 mph NE.

At both installations all sign supports are still standing. However, some splice configurations have remained tighter than others. For example, the Franklin Eze-Erect splice has maintained the tightest connection. The Franklin Eze-Erect splice configuration uses four, flanged ASTM Grade A354-BD bolts and star lock washers which may account for its performance with respect to maintaining a tight connection. The Bar spacers have, in general, remained the second tightest with all other splices having experienced some degree of loosening.

The highway pilot study, located on Loop 303, originally consisted of 10 stop signs. Five of these had the ADOT Standard splice and five had the bar spacer splice. Two of the signs had to be removed when Loop 303 was made non-stop between Thomas Road and Peoria Road. None of these signs have failed. The bar spacer connections have remained tight while the ADOT standard spacer splices have loosened.

TABLE 9. PILOT STUDIES SIGN SUPPORT STRESS LEVELS

	Sign Blank Size		
Splice Configuration	24" x 24"	30" x 30"	36" x 36"
ADOT (hexagonal threaded spacers 5/16" Grade 9 bolts spaced at 3")	50%	100%	200%
Marion	50%	100%	200%
Bar (6"x3/4"x1/2" 5/16" Grade 9 bolts at 3")	50%	100%	200%
Franklin (Eze Erect (Proprietary))	_____	125%	_____
Bar (6"x3/4"x1/2", 3/8" Grade 8 bolts spaced at 4")	50%	100%	200%

IDENTIFIED PROBLEMS

U-channel Selection Chart

The following problems were found in the U-channel selection chart given in Figure 1.

1. The U-channel selection chart was based on a Marion Steel cross-section but a lighter and weaker cross-section from the same manufacturer should be used.
2. The design wind speed does not conform to AASHTO Specifications.
3. The 3-post configuration included in the chart did not pass the crash testing.

In October, 1991, ADOT requested and received a drawing for the 3 lb/ft U-channel post (dated January 20, 1983) from Marion Steel. This drawing was requested in order to verify the U-channel selection chart. However, upon calculating the section properties from the drawing it became evident that a different cross-section had been used to develop the selection chart.

Subsequently, a structural analysis was performed using the January 20, 1983 cross-section (APPENDIX B). A 3 ft x 3 ft diamond shaped sign mounted on a single post, with an 11.5 ft height to the center of the sign, was used for the analysis since similar signs have been reported failed due to wind. Also signs of this size and height are on the acceptable limit of the current selection chart.

The sign support was analyzed for both 45 mph and 60 mph wind speeds. The analysis was performed according to the methodology given in Reference 2. The 40% increase in allowable bending stress when loading is from wind was applied. The analysis does not consider the splice, only the cross-sectional properties and the yield strength of the U-channel post. A yield strength of 80 ksi was used. Table 10 shows the results of the analysis (The 40% increase does not apply to Fa in the $(1 - fa/_{Fa})$ term in Table 10).

TABLE 10. RESULTS OF STRUCTURAL ANALYSIS ON U-CHANNEL POSTS

Wind speed (mph)	45	60
Axial compressive stress fa (psi)	81	81
Allowable axial compressive stress Fa (psi)	1,210	1,210
Bending stress fb (psi)	33,189	58,869
Allowable bending stress Fb (psi)	67,200	67,200
Shear stress from shear and torsion fv (psi)	18,509	32,871
Allowable shear stress Fv (psi)	36,960	36,960
Combined stress ratio (CSR) $= \frac{fa}{Fa} + \frac{fb}{(1-fa/Fa)Fb} + \frac{fv^2}{Fv^2}$ (should be < or = 1)	0.863	1.824

The post when subjected to 60 mph wind is over stressed. The reason that it is over stressed but is within allowable design range in the ADOT U-channel selection chart is because different cross-sections were used.

In January, 1992, Marion Steel Company sent another Marion 3 lb./ft post cross section drawing dated November 30, 1983, to ADOT. Marion Steel Company stated that the November 30, 1983 cross section is their final pass design and the January 20, 1983 cross section was sent to the ATRC in error. The November 30, 1983 section is slightly weaker than the January 20, 1983 section (both cross sections are shown in APPENDIX C). Table 11 shows the comparison of section properties for the three sections.

TABLE 11. COMPARISON OF SECTIONS

Cross Section	Marion 3 lb/ft section used to develop selection chart	Marion 3 lb/ft 1-20-83 section	Marion 3 lb/ft 11-30-83 section
Area (in^2)	1.037	0.852	0.841
Moment of inertia (in^4)	0.477	0.377	0.365
Section modulus (in^3)	0.435	0.350	0.333

As shown in Table 11, it is very important that in the development of the U-channel selection chart section properties used be the minimum section properties from sections certified by the respective manufacturers.

An analysis was performed to determine the loads on the bolts at the splice. The splice strength is related to the bolts. The maximum loads on the bolts at the splice, using different wind speeds is shown in Table 12.

TABLE 12. MAXIMUM LOADS ON BOLTS AT POST SPLICE

Wind speed (mph)	45	60
Maximum load on bolt (pounds)	4,160	7,400
Factor of Safety (based on 7500 lb. proof load)	1.80	1.01

It can be seen from Table 12 that for 60 mph wind, the critical bolt does not have an adequate factor of safety.

The development of the U-channel selection chart was based on a wind speed of 60 mph. Article 1.2.4 of Reference 2 states, "Wind load shall be the pressure of the wind on the horizontal and vertical supports, the sign, luminaries and traffic signals derived from the Wind Pressure Formula in Article 1.2.5 (A) corresponding to the appropriate wind speed as shown in Figures 1.2.4A, 1.2.4B, or 1.2.4C. For areas that lie between isotachs, wind pressure shall be determined by the higher wind speed adjacent to the area. ...Roadside sign structures that are considered to have a relatively short life expectancy may be designed using wind speeds based on a 10-year mean recurrence interval." The commentary further states "Roadside signs generally have much shorter life expectancies than overhead structures; also, in case of failure, they do not endanger life and are easy to replace." A review of Figure 1.2.4A (10-year mean recurrence interval) indicated that the bulk of Arizona lies between the 60 mph and 70 mph isotachs, therefore, the design wind load should be based on 70 mph. Both the Structures Section and Traffic Engineering Section have concurred in the selection of 70 mph design wind speed. The use of 70 mph as the design wind speed was approved by the State Engineer on February 11, 1992 (the design wind speed of 70 mph should also be applied to the selection chart of the P1 and P2 perforated square tubing posts).

The U-channel selection chart included a 3-post configuration which did not pass the crash testing in accordance with NCHRP Report 230 (the 3-post configuration passed the crash testing in strong soil during Phase II of the TTI study for ADOT, but failed in the crash testing in weak soil conducted by TTI for the Texas Department of Transportation in April, 1988). Three-post configurations can only be installed if the posts are not within a 7-foot path or where they are shielded by a FHWA approved safety feature such as a concrete barrier or guardrail.

Standard Specification

The standard specification (Figure 2) states that the first hole for both the base and sign post shall be 1" form the ends of the post. Posts purchased from Marion Steel have not met this requirement. At one end of the posts the hole is 1" from the end, however the other end of the post generally has a hole much less than 1" from the end. The result is that for any given installation the wrong end of the post has an equal chance of becoming part of the splice. This could explain the zipper effect failures that have been experienced.

Standard Drawing

The ADOT U-channel post standard drawing shows 1/2" x 5/8" long threaded spacer at the splice which is different from the spacer used by TTI to test the U-channel system. TTI used 3/4" diameter x 1/2" thick spacers without thread. The problem of threading was described in the subsection "Construction Installations vs. Maintenance Installations" under the section "PROBLEM DESCRIPTION". The following subsection "Spacer Thickness" discusses the problem of spacer thickness.

Effect of Size and Spacing of Spacers on Stresses in Posts

A structural analysis was performed to check the stresses in the back of the post at the splice using the January 20, 1983 Marion Steel cross section. Forty-five mph wind speed was used for the wind load. The analysis was performed for 3/4" diameter, 5/8" diameter, and 1/2" diameter spacers with bolt spacing equal to 2, 3, and 4 inches. The back of the post was treated as a structural member spanning between two sides. Table 13 shows the results of the analysis.

TABLE 13. MAXIMUM FLEXURAL STRESSES IN BACK OF POST AT SPLICE

Bolt spacing (inches)	Maximum flexural stress (psi) in back of post		
	3/4" diameter spacer	5/8" diameter spacer	1/2" diameter spacer
2	166,800	215,600	263,600
3	99,500	127,300	154,700
4	80,700	102,400	123,900

Some of the theoretical stresses shown in Table 13 are not attainable because they are far beyond the failing stress of the steel, and the actual stresses would generally be lower because of the effect of local yielding and stress redistribution. However, it can be seen that the stress decreases as the size of spacer and bolt spacing increase. The optimum diameter of the spacer is 3/4 inch.

Spacer Thickness

The original TTI research stated that a spacer thickness of 1/16 inch less than the distance between the posts when laid in the nested configuration (without bolt tension) performed satisfactorily and assured contact between the sides of the section once the bolts were tightened[4]. The spacer thickness should be 1/2 inch for ADOT systems using either the Marion or Franklin 3 lb/ft posts.

Installation Depth

The ADOT U-channel post standard drawing shows an installation depth of 38" for the base post which was based on the installation depth used in Phase II of the TTI study. The ADOT maintenance workers generally feel that the standard specification should provide some flexibility on the installation depth for different soil conditions.

Post Yield Strength

Results of the tensile testing conducted by WTI indicate that two of the eight Marion Steel post specimens tested had yield points below the required minimum value of 80 ksi. The current standard specification (Figure 2) does not address the issue of testing to verify yield strength before acceptance.

COST CONSIDERATIONS

Cost information will be of vital interest to managers making decisions regarding ADOT's current small sign support system and future small sign support alternatives. Cost information will be given for the two systems ADOT currently has specifications for: the U-channel system and the perforated square-tubing or P1/P2 (with and without the proprietary slip-base). Less detailed information about two proprietary systems will also be given.

For ADOT's current U-channel and the P1/P2 small sign supports the costs will be given for new installations (construction) and for replacement (maintenance). Tables 14 & 15 show the cost breakdown.

TABLE 14. U-CHANNEL & P1/P2: NEW INSTALLATION COST BREAKDOWN IN DOLLARS

SYSTEM	MATERIAL	LABOR	EQUIPMENT	TOTAL
U-channel	19	10	10	39
P1/P2	30	30	10	70
P1/P2 w/ slip-base	30 + 40 (for slip-base)	30	10	110

TABLE 15. U-CHANNEL & P1/P2: REPLACEMENT COST BREAKDOWN IN DOLLARS

SYSTEM	REMOVAL OF DAMAGED MATERIAL	SALVAGE VALUE	MATERIAL	LABOR	EQUIPMENT	TOTAL
U-channel	5	5	19	10	10	39
P1/P2	4	15	30	10	10	39
P1/P2 w/ slip-base	4	40 (slip-base) +15	70	10	10	39

Franklin Steel manufactures a small sign support system called Eze-Erect. The cost of the system is $24.36 for galvanized and $21.24 for powder epoxy coated. These are truck load costs and include a 3.5 foot base, a 10 foot sign post (3 lb/ft) and all the necessary hardware to install the sign support. The labor and equipment cost should be the same as the generic U-channel as the systems are very similar with respect to installation practice. The replacement cost should be approximately equal to the generic U-channel systems.

Marion Steel has a breakaway small sign support system called Minute Man. This system uses cast steel alloy couplers that fit into the U-channel posts. The couplers are bolted to the U-channel base post and the U-channel sign post. The couplers are then joined to each other by a shear pin; forming the only connection between the base and sign post. The price, when purchased in truck load quantities, is $21.65. Marion Steel has another lap splice system very similar to ADOT's generic U-channel small sign support except that is uses square threaded spacers 3/8" thick, and Grade 9 bolts spaced at 4". The cost of the Marion lap splice system is approximately the same as ADOT's current U-channel small sign support.

The Minute Man and Marion lap splice systems are new and do not have a long performance record. Here again, the labor and equipment costs are similar to the generic U-channel system. The salvage value may be higher for the minute-man due to shear pin connection.

The P1 and P2 sign supports with slip-base are the most expensive system. The P1/P2 system without slip-base become cost competitive with the U-channel systems when considering ADOT's current interim policy of using two U-channel posts on all installations.

If ADOT decides to use the bar spacer in lieu of the threaded hexagonal spacer the cost of the bar spacer is as follows: steel (ASTM A108) is approximately $.38/piece, cutting and drilling is approximately $.10/piece, and the zinc coating is approximately $.18/piece. The total cost per piece is approximately $.66. This cost should not greatly affect the previous cost analysis.

CONCLUSIONS

The static testing verified that all the lap splice connections tested exceeded the design requirement established in the original research. Since several of these lap splice connections failed in service conditions, this indicated that the static bending test cannot be used to represent in-service conditions.

The dynamic testing produced considerable variability between repeat tests. The high variability inhibits prediction of field performance.

The relative performance between the lap splice connections depended upon the energy level at which the test was conducted (i.e. high, medium, low). Since no relationship exists between the test energy levels and field performance, it is impossible to predict field performance based on the dynamic test results alone.

The dynamic testing indicated that the post (with no lap splice) and the Franklin Eze-Erect System sustained the high cycle of loading.

The following conclusions and recommendations are made on the design and installation of the ADOT standard U-channel sign supports:

1. The results from the dynamic testing did not support the viability of the ADOT U-channel single support post system, including the hexagonal and bar spacer options.
2. The results from the pilot testing should also be considered for the final evaluation of the system.
3. The recommendation (stated in the office memo dated January 16, 1992 from David Olivarez of ADOT Traffic Operation Services) that 2-post supports be used in lieu of single post supports until the completion of the evaluation is supported.

4. The U-channel selection chart should be revised to use a design wind speed of 70 mph instead of 60 mph.
5. Among the U-channel sections from different manufacturers, the one that has the minimum section properties should be used for the design calculations (Marion Steel drawing dated November 30, 1983 shown in APPENDIX C).
6. A note should be added to the chart that the 3-post signs shall only be installed if the posts are not within a 7-foot path or where they are shielded by a FHWA approved safety feature such as concrete barrier or guardrail.
7. Use a 3/4" wide x 1/2" thick x 6" long zinc coated bar spacer of ASTM A108 steel or approved equal with two 3/8" diameter, Grade 8 bolts at 4" spacing (This spacer will work for all manufacturers mentioned in this report).
8. A torque of 37 ft-lbs for the fastening of the bolts should be specified.
9. This splice feature should be crash tested in both S1 (strong soil) and S2 (weak soil) conforming to NCHRP Report 230.
10. Include a requirement in the ADOT standard specification or special provisions on tensile testing of samples when purchasing U-channel posts.
11. The ADOT U-channel post system has the lower installation cost per post compared to the P1 and P2 systems. The replacement cost per post of these systems are about the same. In the long term, if the ADOT U-channel post system (bar spacer) passes the crash testing, it should be considered for inclusion in the ADOT Standards as an alternative for construction.

REFERENCES

1. Ross, Hayes E. Jr., Sicking, Dean L., Campise, Wanda L., Zimmer, Richard A., Small Sign Support Analysis: Phase 1 Crash Test Program, Report No. FHWA-AZ88-202-IV, Arizona Department of Transportation, August 1988.

2. Standard Specifications for Structural Supports for Highway Signs, Luminaires, and Traffic Signals, American Association of State Highway and Transportation Officials, 1985.

3. Michie, Jarvis, D., Recommended Procedures for the Safety Performance Evaluation of Highway Appurtenances, National Cooperative Highway Research Program Report 230, March 1981.

4. Morgan, James R., Ross, Hayes E. Jr., Schuler, Richard E., Campise, Wanda, L., Small Sign Support Analysis: Phase II Static, Pendulum, and Full-Scale Crash Test Program Volume I (Report), Report No. FHWA-AZ88-202-II, Arizona Department of Transportation, August 1984.

APPENDIX A:

Standard Drawings for Small Sign Support Systems Tested by TTI

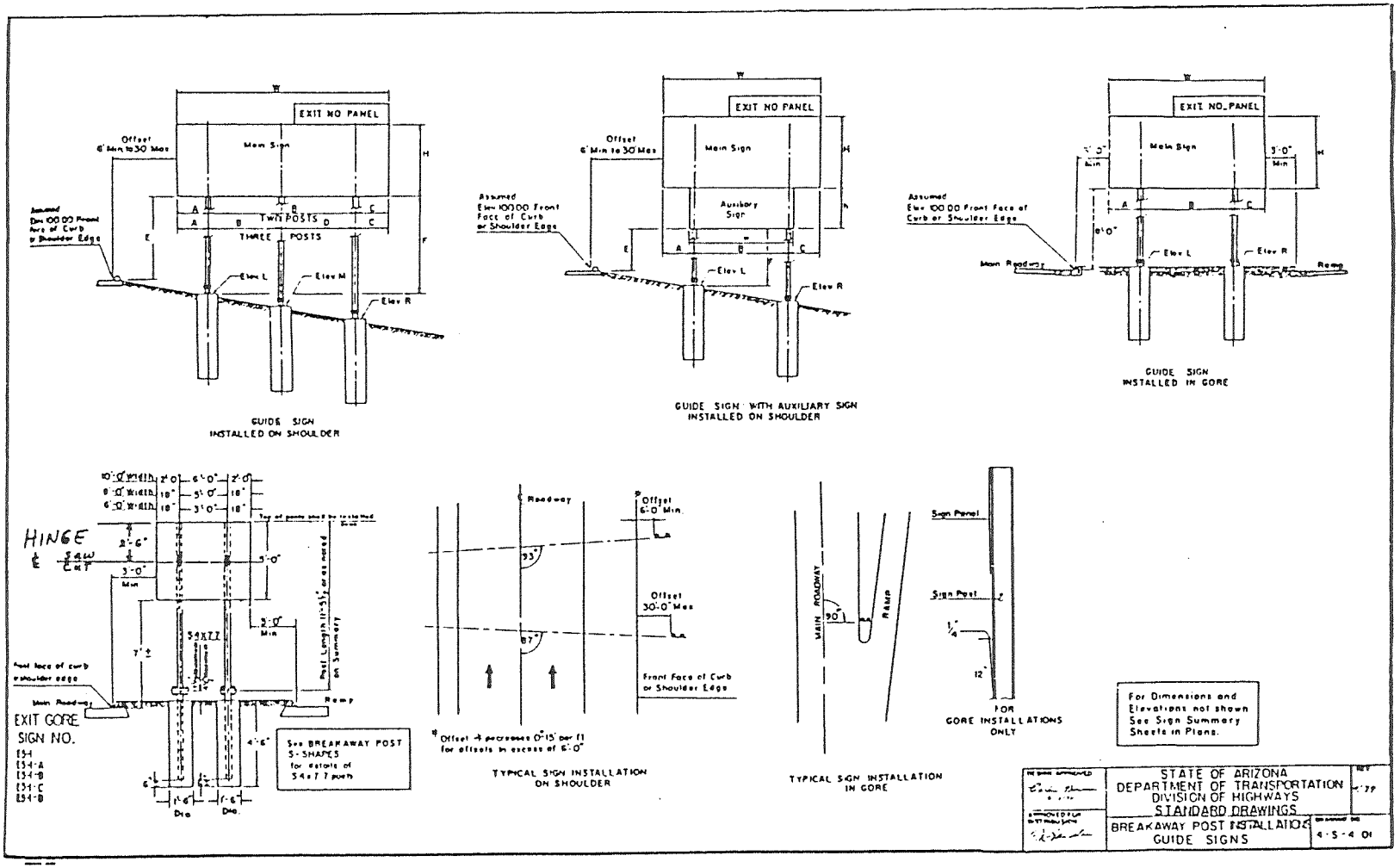

FIGURE A-1 SLIPBASE DESIGN, TESTS 1 AND 2

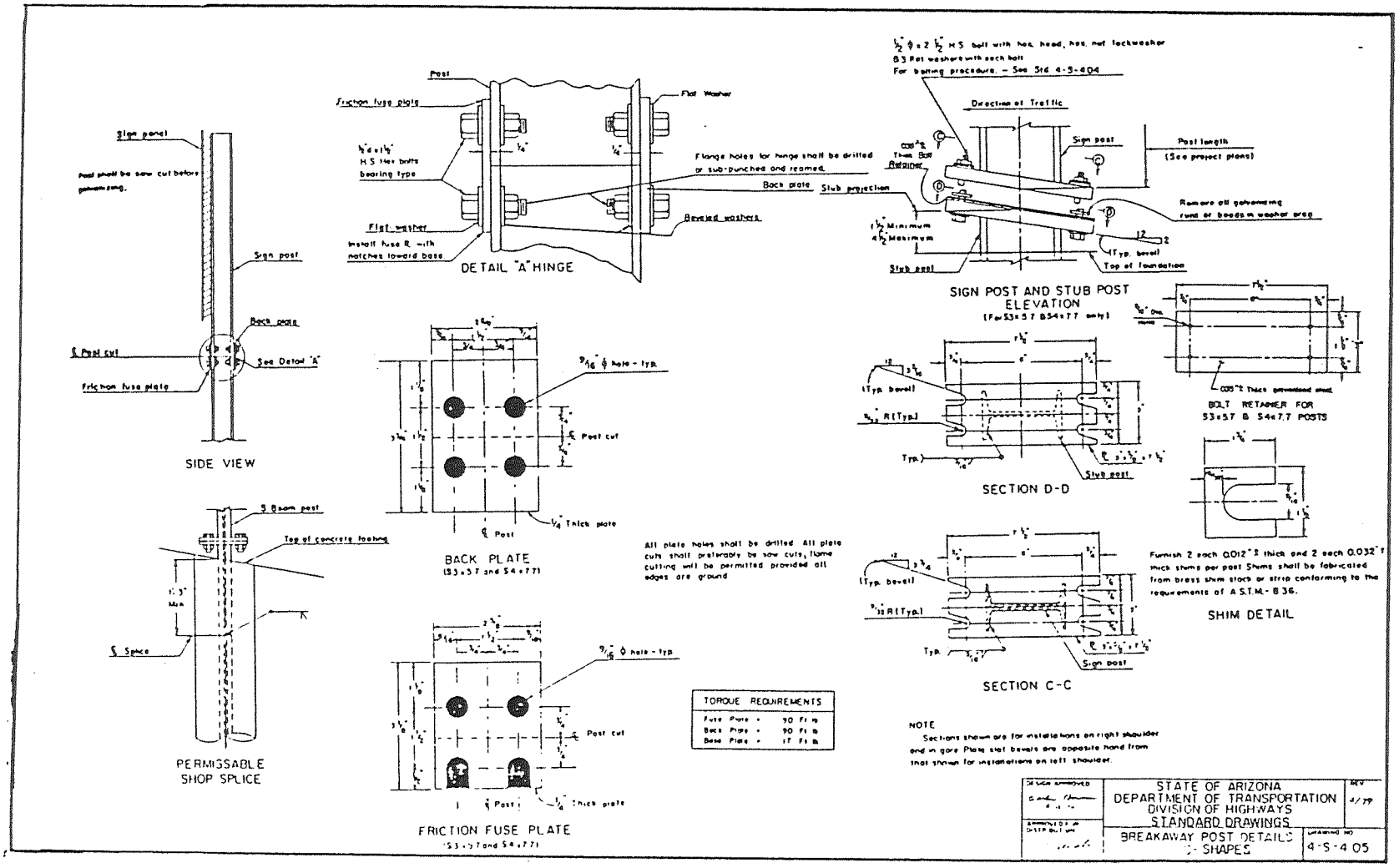

FIGURE A-1 SLIPBASE DESIGN, TESTS 1 AND 2 (continued)

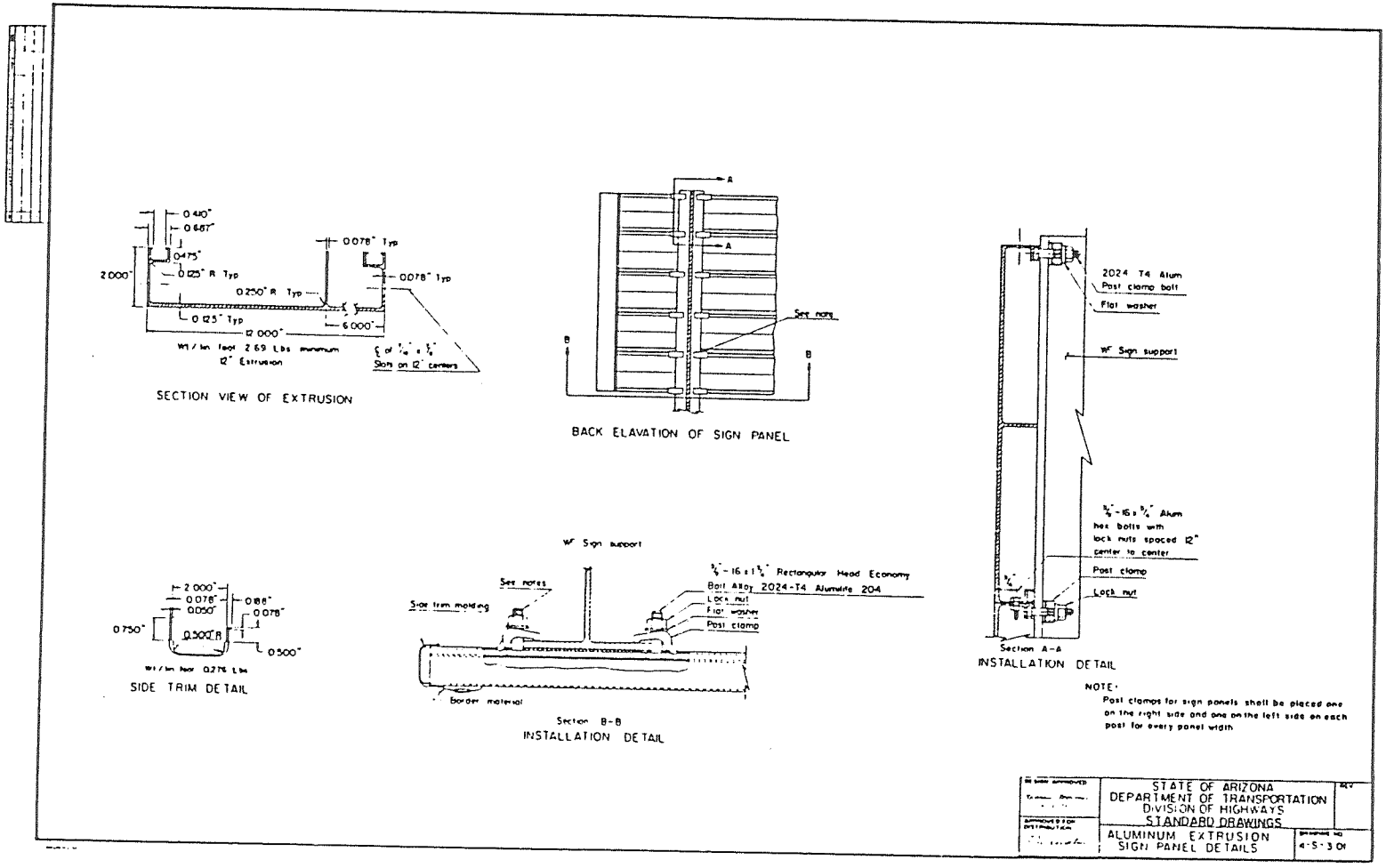

FIGURE A-1 SLIPBASE DESIGN, TESTS 1 AND 2 (concluded)

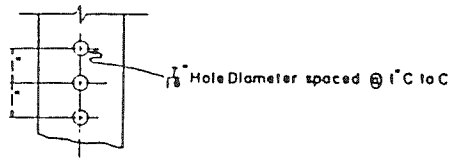

TYPICAL POST DETAIL

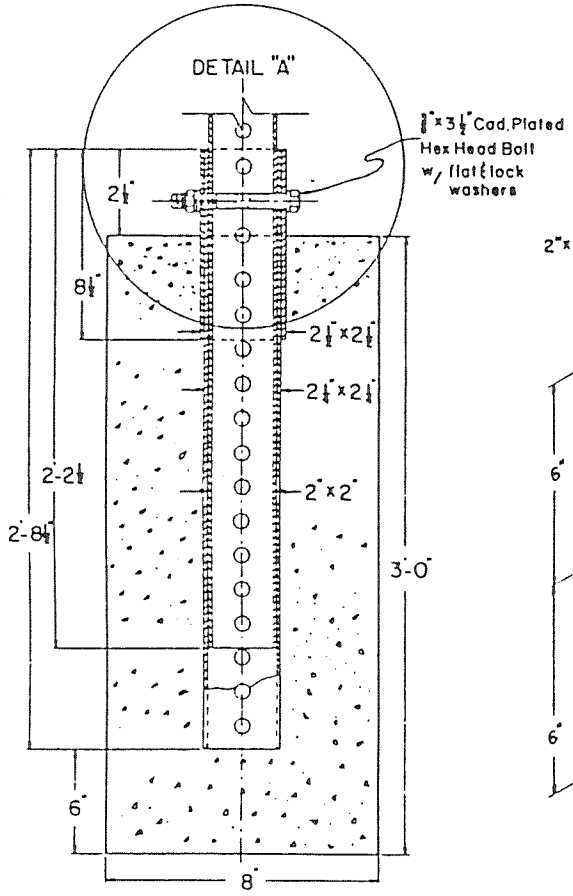

FOUNDATION DETAIL

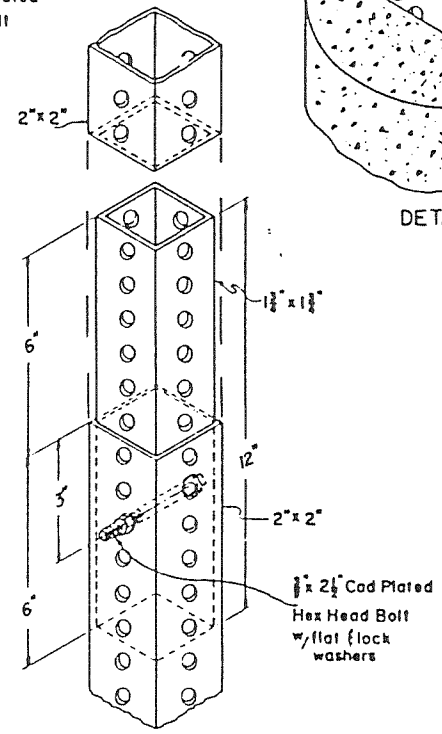

PERMISSABLE FIELD SPLICE

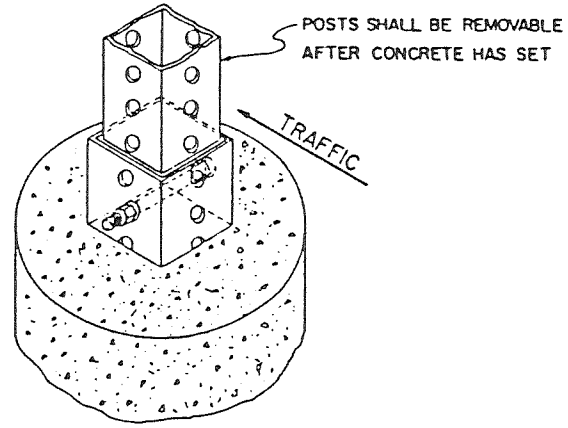

DETAIL "A"

Type P-1 & P-2 perforated posts shall be Square Tube formed from 0.105 U.S.S. guage ASTM A-366 cold rolled carbon steel. The square tubes shall be welded directly in the corner by high frequency resistance welding or equal. The posts shall be externally scarfed to agree with std. corner radii of 3/32" ± 1/64".

Type P-1 & P-2 perforated posts shall be galvanized to conform to ASTM A-525. Coating designation G-90

All hardware shall conform to ASTM A-307 Class A.

All hardware shall be galvanized to conform to ASTM A-153 or Cadmium Plated to conform to ASTM A-165.

All concrete shall be Class B.

FIGURE A-2 SQUARE STEEL TUBE, SINGLE POST, TESTS 3 AND 4

DESIGN APPROVED 6/14/84	STATE OF ARIZONA DEPARTMENT OF TRANSPORTATION DIVISION OF HIGHWAYS STANDARD DRAWINGS	REV 11/4/74 1/83
APPROVED FOR DISTRIBUTION	FOUNDATION DETAIL FOR P-1 PERFORATED POST (SINGLE)	DRAWING NO. 4-S-4.16

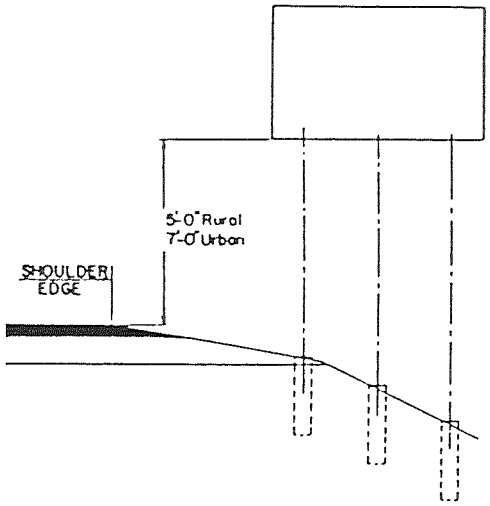

TYPICAL INSTALLATION
for Guide Signs.

NUMBER of POSTS PER SIGN (TELESCOPED)

Sign Height	Sign Width 4'	5'	6'	7'	8'	9'	10'	11'	12'
4	*		2	2	3	3	3	4	4
5		2	2	3	3	4	4	5	5
6	2	2	3	4	4	5	5	—	—
7	2	3	4	4	4	5			
8	3	3	4						

USE BREAKAWAY POSTS

* See Drawing No. 4-S-4.16

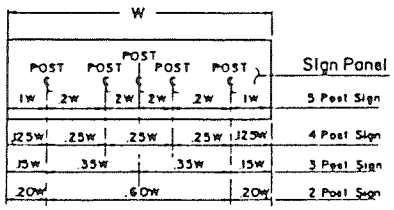

SIGN POST LOCATIONS

SIGN WIDTH

	4'	5'	6'	7'	8'	9'	10'	11'	12'
.10 W						.9	1.0	1.1	1.2
.125 W			.75	.875	1.0	1.125	1.25	1.375	1.5
.15 W	.6	.75	.90	1.05	1.2	1.35	1.5		
.20 W	.8	1.0	1.2	1.4					
.25 W			1.5	1.75	2.0	2.25	2.5	2.75	3.5
.35 W	1.4	1.75	2.1	2.45	2.8	3.15	3.5		
.60 W	2.4	3.0	3.6	4.2					

POST SPACING CHART

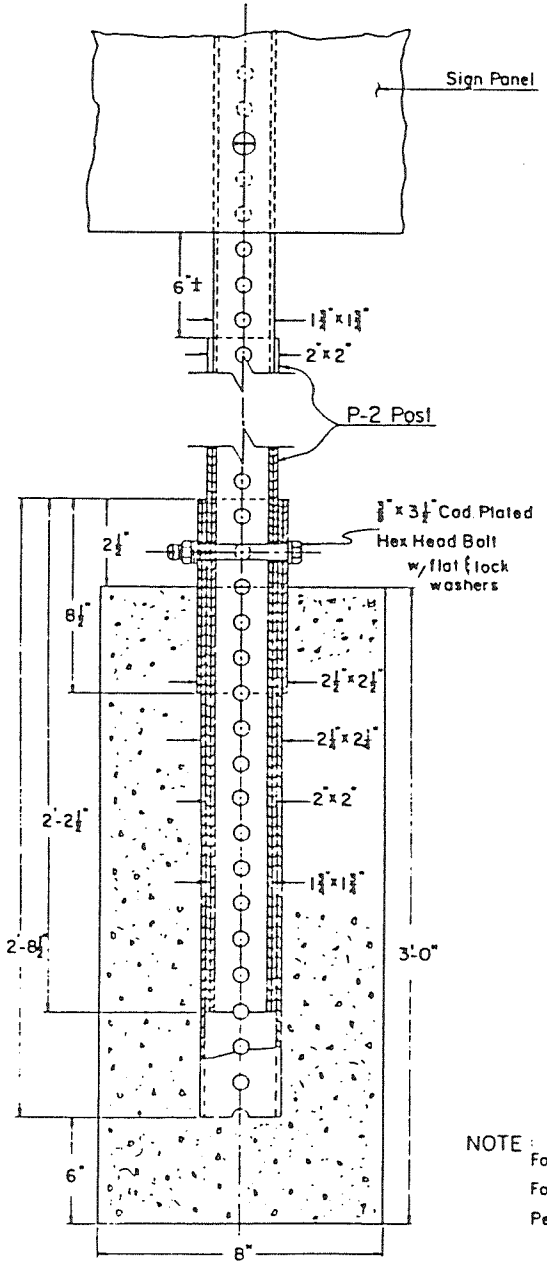

FOUNDATION DETAIL
P-2 POST

NOTE:
For permissible field splice see Foundation Detail for P-1 Perforated Post (Single)

DESIGN APPROVED	STATE OF ARIZONA DEPARTMENT OF TRANSPORTATION DIVISION OF HIGHWAYS STANDARD DRAWINGS	REV.
APPROVED FOR DISTRIBUTION	FOUNDATION DETAIL FOR P2 PERFORATED POST (TELESCOPING	DRAWING NO 4-S-4.17

FIGURE A-3 SQUARE STEEL TUBE, MULTIPLE POSTS, TESTS 5, 6, 19, AND 20

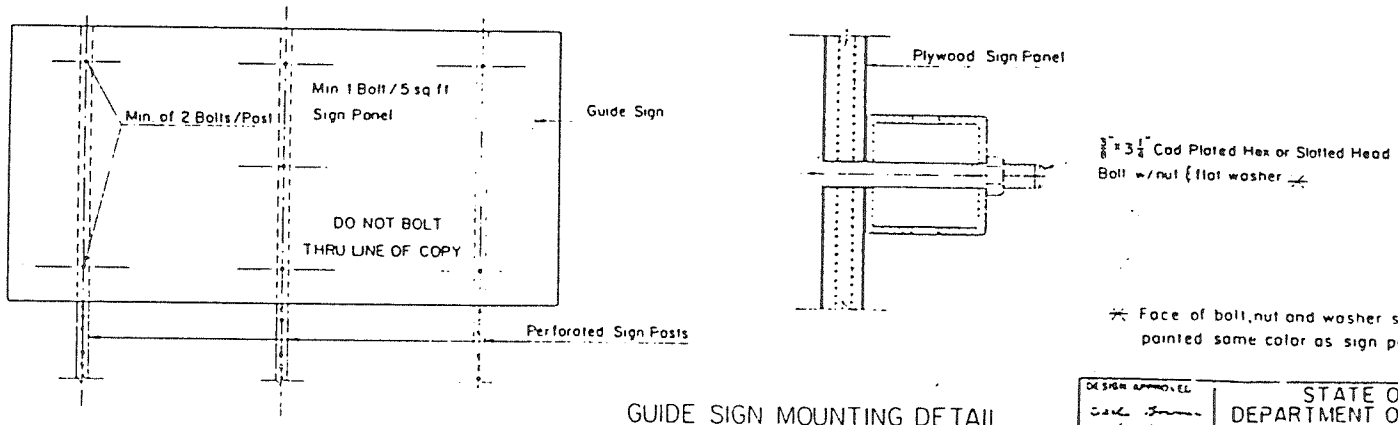

GUIDE SIGN MOUNTING DETAIL

DESIGN APPROVED	STATE OF ARIZONA DEPARTMENT OF TRANSPORTATION DIVISION OF HIGHWAYS STANDARD DRAWINGS	REV
APPROVED FOR DISTRIBUTION	SIGN PANEL MOUNTING ON PERFORATED POST	DRAWING NO. 4-S-4 18

FIGURE A-4 SQUARE STEEL TUBE, MULTIPLE POSTS, TESTS 5, 6, 19, AND 20 (concluded)

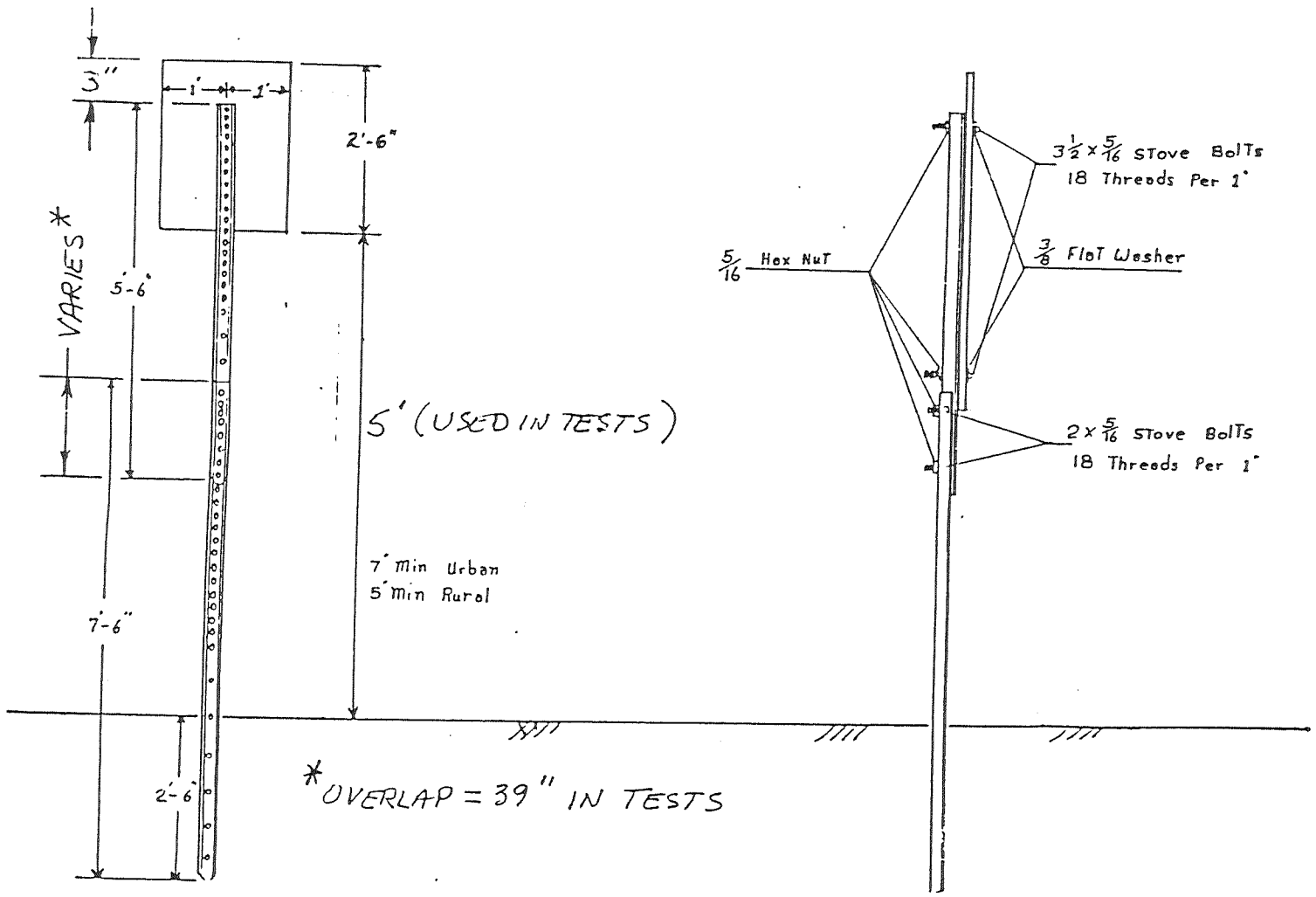

FIGURE A-5 STEEL U-POST, SINGLE SUPPORT, TESTS 7, 8, AND 13

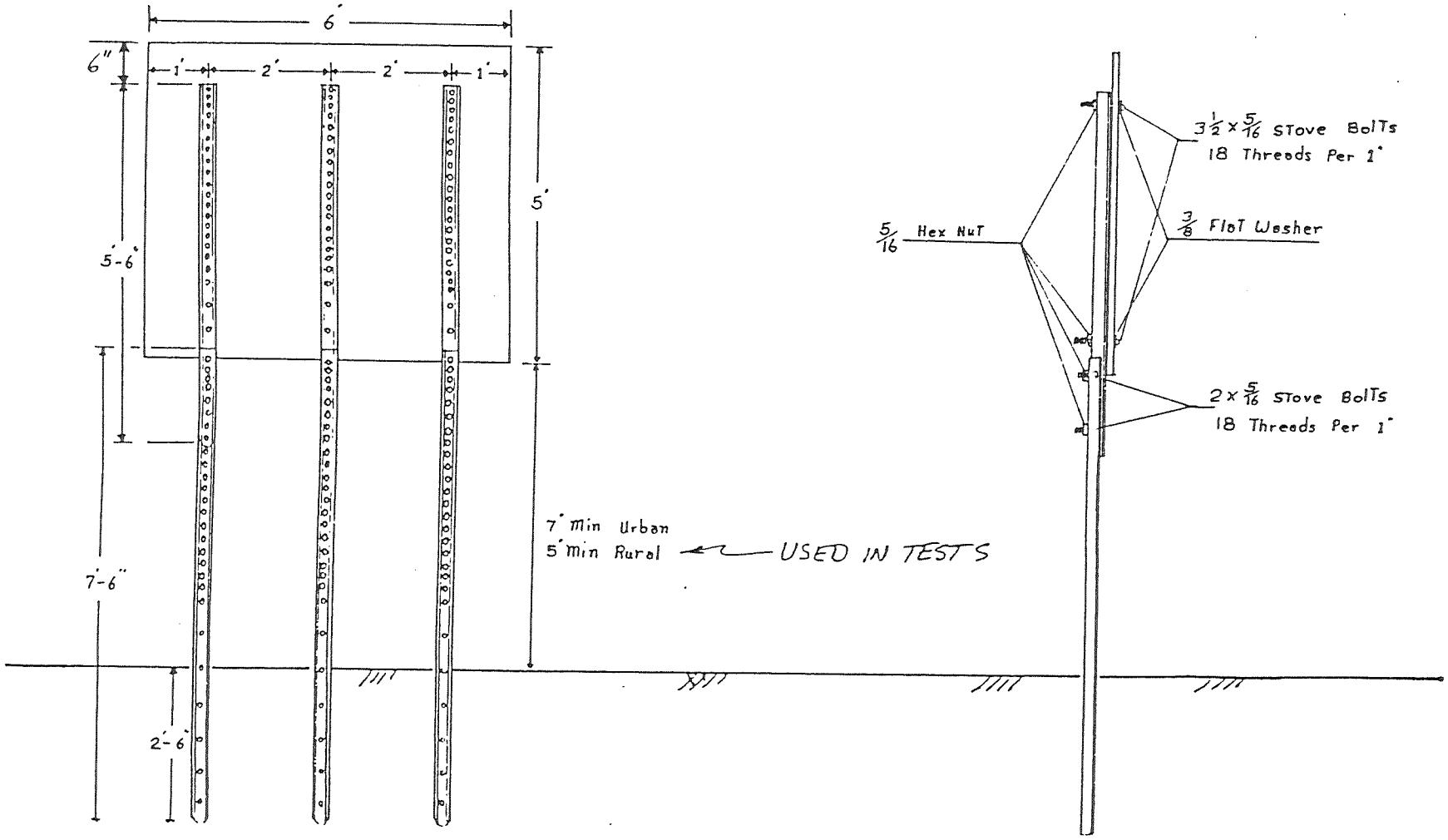

FIGURE A-6 STEEL U-POST, THREE SUPPORTS, TESTS 9 AND 10

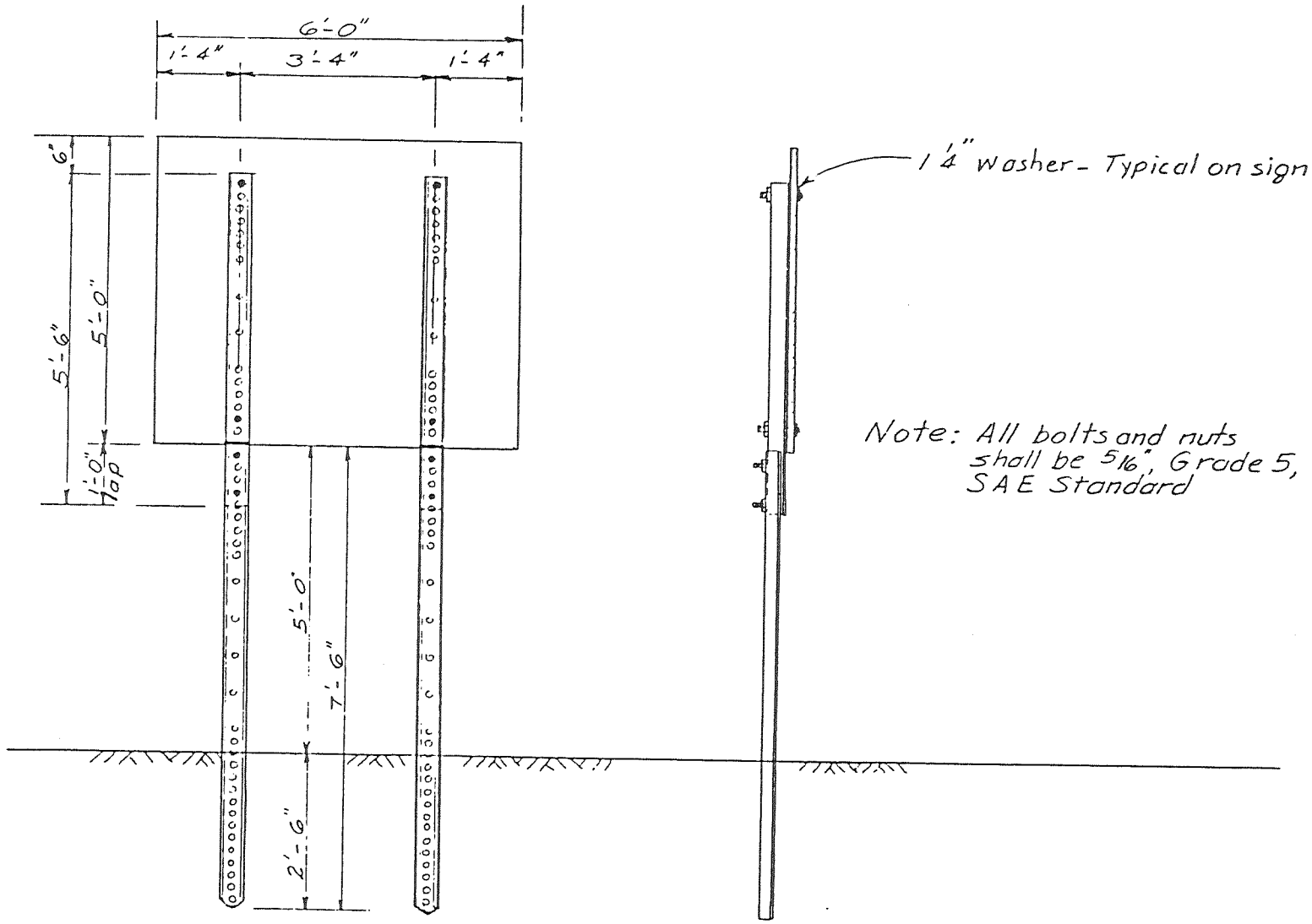

FIGURE A-7 STEEL U-POST, TWO SUPPORTS, TESTS 11 AND 12

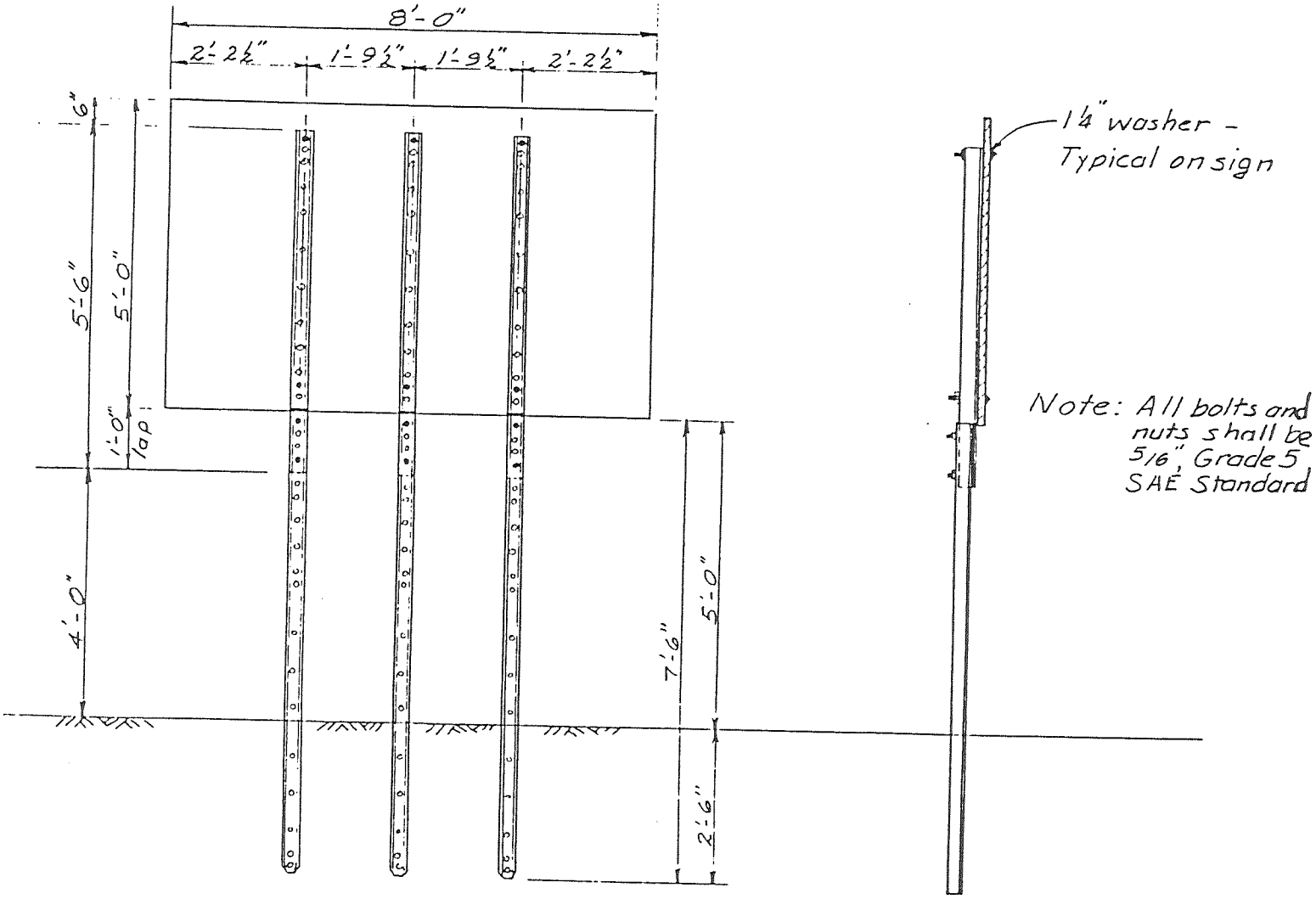

FIGURE A-8 STEEL U-POST, THREE SUPPORTS, TESTS 14, 15, 18, AND 21

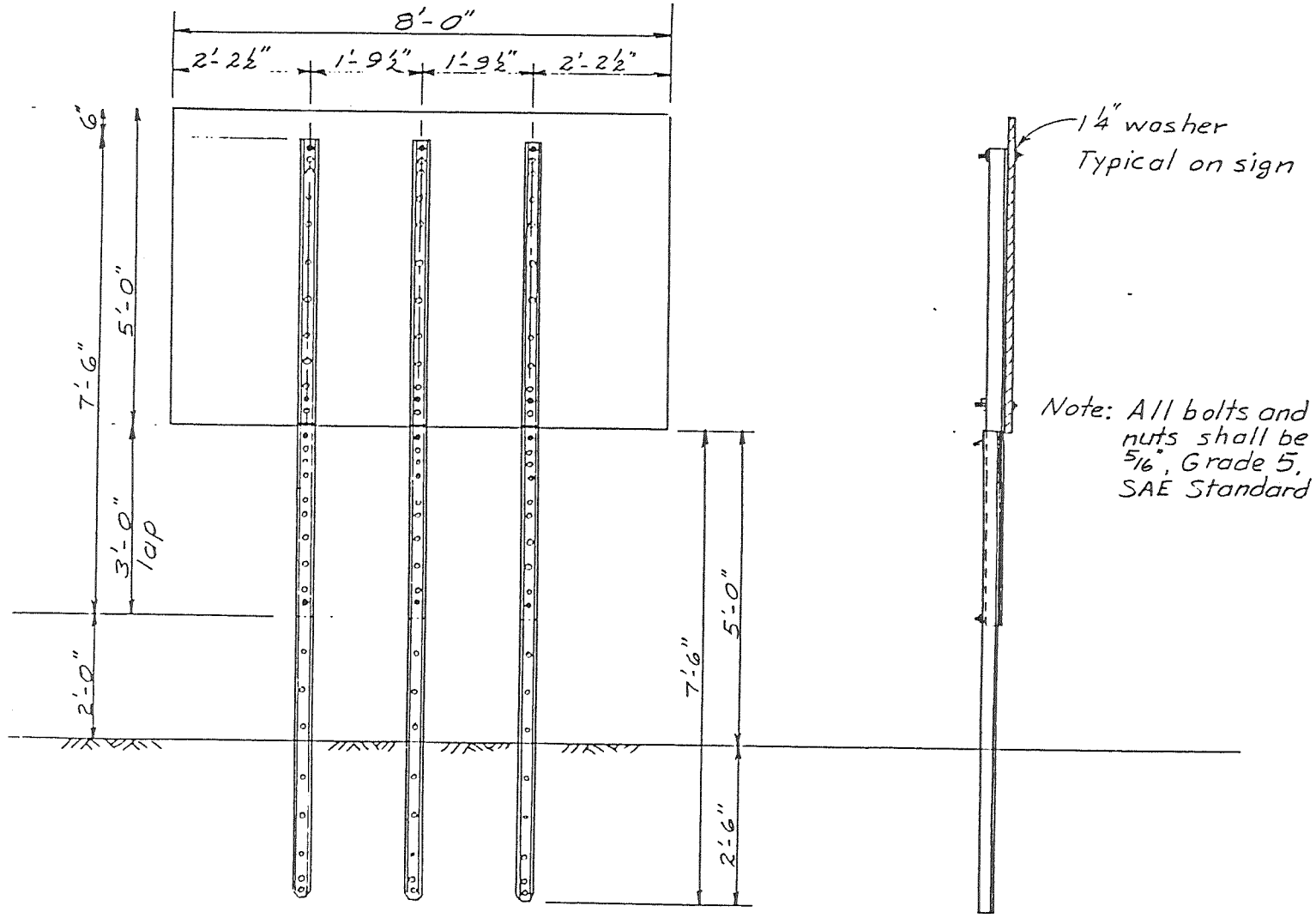

FIGURE A-9 STEEL U-POST, THREE SUPPORTS, TESTS 16 AND 17

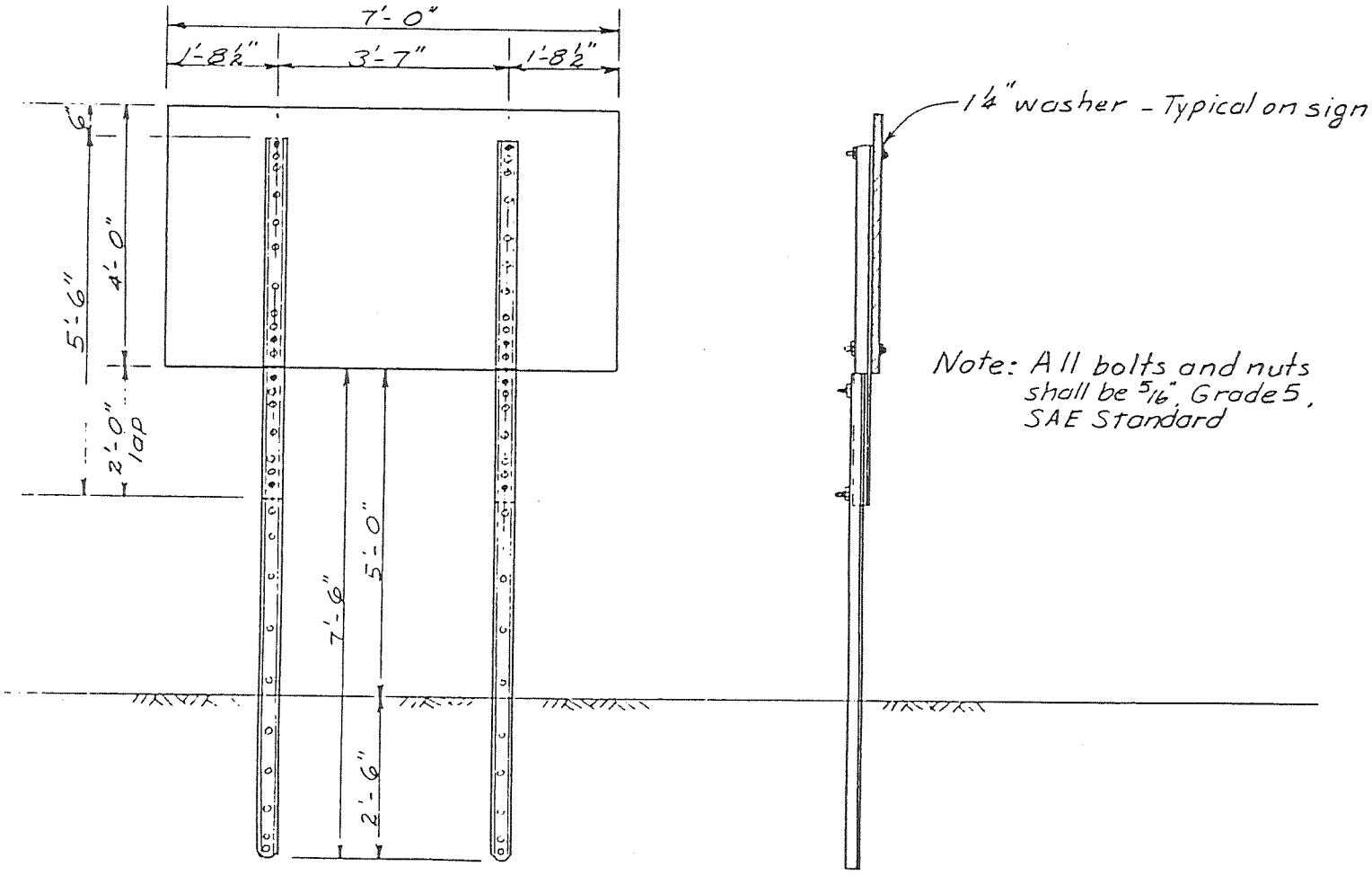

FIGURE A-10 STEEL U-POST, TWO SUPPORTS, TESTS 22 AND 23

APPENDIX B:

Investigation of Stresses in U-channel Posts from Wind

Investigation of Stresses in U-channel Posts from Wind

Calc. by: YH, ATRC 10/91

Marion 3 lb/' sign post
Section properties – without hole (with respect to x-x)

① $0.220 \times 0.066 \times 2 = 0.029 \times 1.848 = 0.054$

② $1.382 \times 0.129 = 0.178 \times 1.751 = 0.312$

③ $0.134 \times 1.554 \times 2 = 0.416 \times 0.909 = 0.378$

④ $0.805 \times 0.132 \times 2 = 0.213 \times 0.066 = 0.014$

⑤ $0.261 \times 0.122 \times 2 = 0.064 \times 0.193 = 0.012$

$A = 0.900 \square''$ $\Sigma AY = 0.770 \text{ in}^3$

$$\bar{Y} = \frac{0.770}{0.900} = 0.856''$$

I: $\frac{1}{12} \times 0.220 \times 0.066^3 \times 2 = 0.0000$

$0.029 \times 0.992^2 = 0.0285$

$\frac{1}{12} \times 1.382 \times 0.129^3 = 0.0003$

$0.178 \times 0.895^2 = 0.1426$

$\frac{1}{12} \times 0.134 \times 1.554^3 \times 2 = 0.0838$

$0.416 \times 0.053^2 = 0.0012$

$\frac{1}{12} \times 0.805 \times 0.132^3 \times 2 = 0.0003$

$0.213 \times 0.790^2 = 0.1329$

$\frac{1}{12} \times 0.261 \times 0.122^3 \times 2 = 0.0001$

$0.064 \times 0.663^2 = 0.0281$

0.4178 in^4

MATERIAL LIST			2 of 27
MARK	No. REQ'D.	DESCRIPTION	MAT'L.

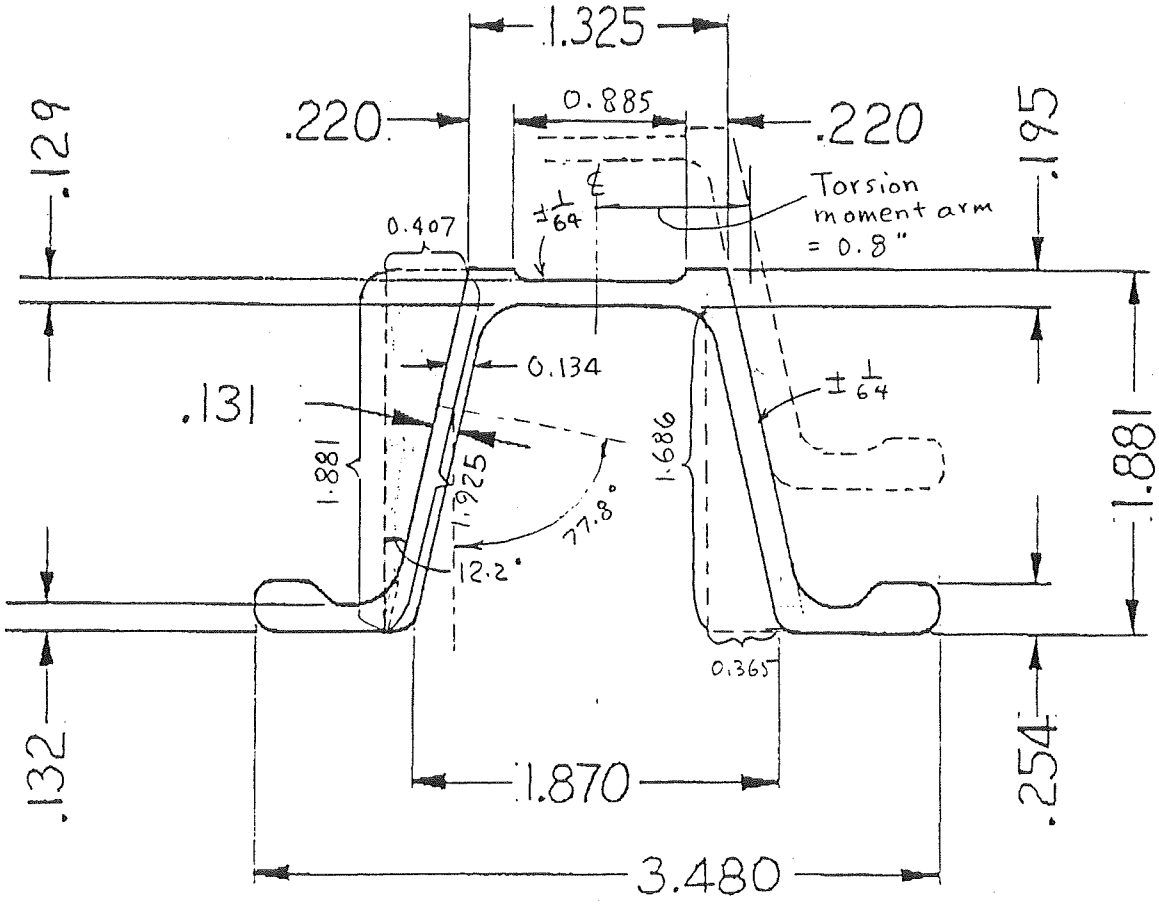

SCALE	PARTS LIST	DO NOT SCALE BLUE PRINT Read All Notes Before Starting Work	MARION STEEL COMPANY
NONE			912 CHENEY AVE. MARION, OHIO
LOCATION			
UNIT: 3 Lb SIGN POST	DRAWN: AR	DATE: 1-20-83	DRAWING No.
SUBJECT	CHECKED	DATE	RM-NO 3 SP
	APPROVED	DATE	

MATERIAL LIST			3 of 27
MARK	No. REQ'D.	DESCRIPTION	MAT'L.

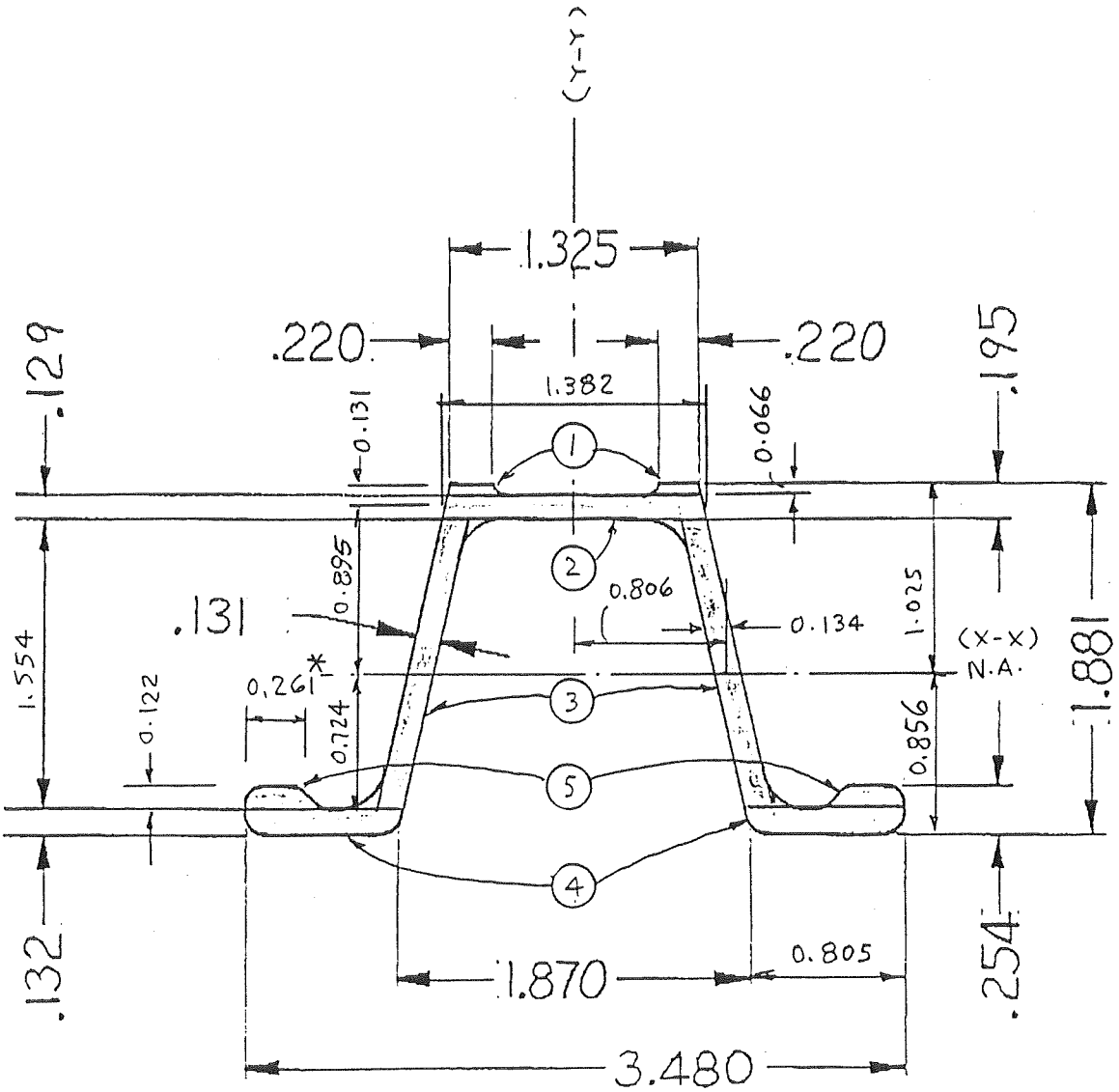

Without hole

* From average of measurement by Marion Steel Co.

SCALE	PARTS LIST	DO NOT SCALE BLUE PRINT Read All Notes Before Starting Work	MARION STEEL COMPANY
NONE			912 CHENEY AVE. MARION, OHIO
LOCATION			
UNIT: 3 Lb SIGN POST	DRAWN	DATE 1-20-83	DRAWING No.
SUBJECT	CHECKED	DATE	RM-NO 3 SP
	APPROVED	DATE	

Section Properties - With 3/8" ϕ hole (with respect to x-x)

$$0.900 \times 0.856 = 0.770$$

$$-(0.375 \times 0.129) = -0.048 \times 1.751 = -0.084$$

$$490 \times \frac{0.852}{144} = 2.899 \text{ lb/ft} \doteqdot 3 \qquad A = 0.852 \ \square'' \qquad \Sigma AY = 0.686 \text{ in}^3$$

$$\bar{Y} = \frac{0.686}{0.852} = 0.805''$$

I:

$$0.4178$$

$$0.900 \times 0.051^2 = 0.0023$$

$$-\left(\frac{1}{12} \times 0.375 \times 0.129^3\right) = -0.0001$$

$$-(0.048 \times 0.946^2) = -0.0430$$

$$0.3770 \text{ in}^4$$

$$S_t = \frac{0.3770}{1.076} = 0.350 \text{ in}^3$$

$$S_b = \frac{0.3770}{0.805} = 0.468 \text{ in}^3$$

Q:

$$0.805 \times 0.132 \times 2 \times 0.739 = 0.157$$

$$0.261 \times 0.122 \times 2 \times 0.612 = 0.039$$

$$0.134 \times 0.673 \times 2 \times 0.337 = 0.061$$

$$0.257 \text{ in}^3$$

$$b = 0.131 \times 2 = 0.262''$$

MATERIAL LIST			5 of 27
MARK	No. REQ'D.	DESCRIPTION	MAT'L.

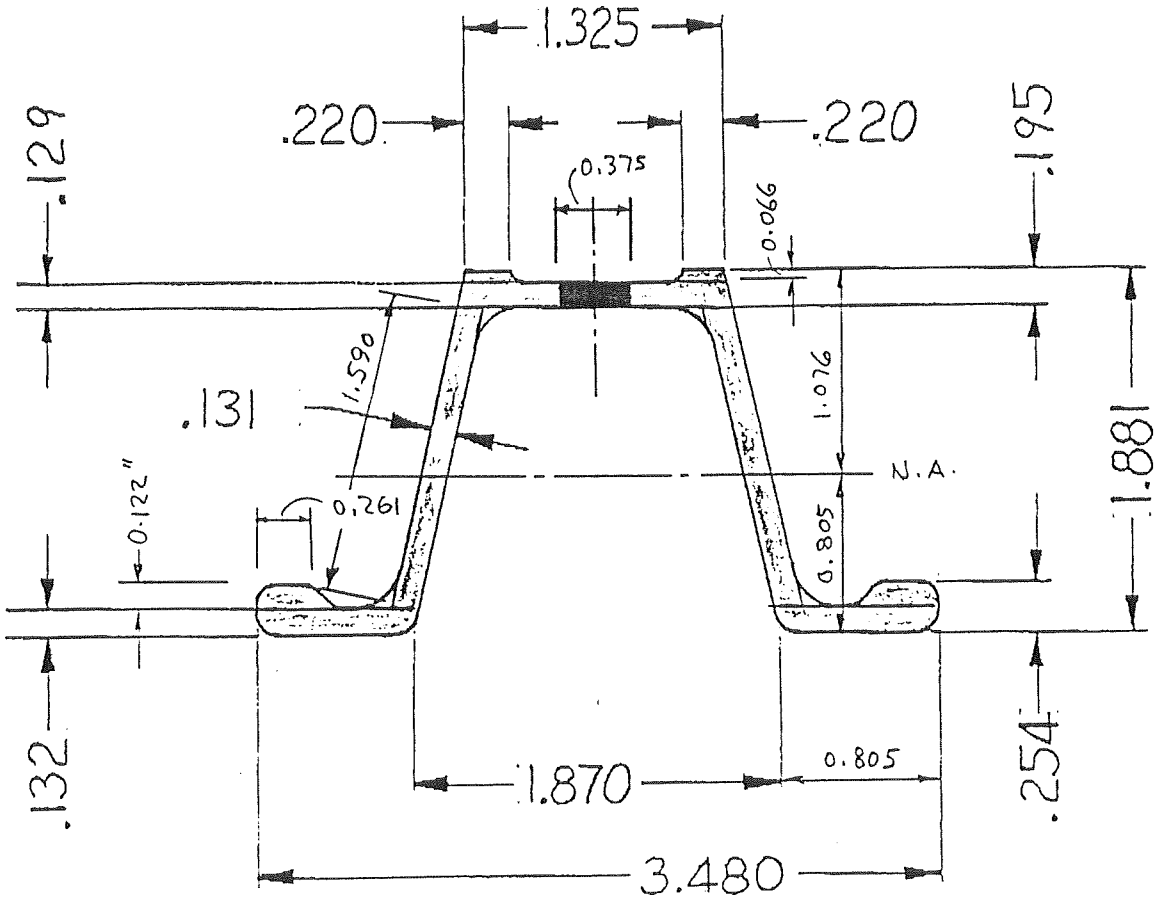

With $\frac{3}{8}$" hole

SCALE	PARTS LIST	DO NOT SCALE BLUE PRINT Read All Notes Before Starting Work	MARION STEEL COMPANY
NONE			912 CHENEY AVE. MARION, OHIO
LOCATION			
UNIT: 3 Lb SIGN POST	DRAWN	DATE 1-20-83	DRAWING No.
SUBJECT	CHECKED	DATE	RM-NO 3 SP
	APPROVED	DATE	

Torsional resistance J :

$$2 \times 0.261 \times 0.254^3 = 0.00855$$

$$2 \times 0.544 \times 0.132^3 = 0.00250$$

$$2 \times 1.590 \times 0.131^3 = 0.00715$$

$$2 \times 0.220 \times 0.195^3 = 0.00326$$

$$2 \times 0.255 \times 0.129^3 = 0.00109$$

$$0.02255$$

$$J = \frac{1}{3} \times 0.02255 = 0.00752 \text{ in}^4$$

Section Properties - without hole (with respect to Y-Y)

$$I: \frac{1}{12} \times 0.066 \times 0.220^3 \times 2 = 0.0001$$

$$0.066 \times 0.220 \times 0.553^2 \times 2 = 0.0089$$

$$\frac{1}{12} \times 0.129 \times 1.382^3 = 0.0284$$

$$\frac{1}{12} \times 0.131 \times 1.590 \left(\overbrace{0.131^2 \sin^2 77.8^\circ}^{0.01639} + \overbrace{1.590^2 \times \cos^2 77.8^\circ}^{0.11290}\right) \times 2 = 0.0045$$

$$1.554 \times 0.134 \times 0.806^2 \times 2 = 0.2706$$

$$\frac{1}{12} \times 0.132 \times 0.805^3 \times 2 = 0.0115$$

$$0.132 \times 0.805 \times 1.338^2 \times 2 = 0.3805$$

$$\frac{1}{12} \times 0.122 \times 0.261^3 \times 2 = 0.0004$$

$$0.122 \times 0.261 \times 1.610^2 \times 2 = 0.1651$$

$$0.8700 \text{ in}^4$$

With $\frac{3}{8}''\phi$ hole (with respect to Y-Y)

$$I = 0.8700 - \frac{1}{12} \times 0.129 \times 0.375^3 = 0.8700 - 0.0006 = 0.8694 \text{ in}^4$$

$$S = \frac{0.8694}{1.740} = 0.500 \text{ in}^3$$

Q: Use section without hole but adjust b for hole

$$0.066 \times 0.220 \times 0.553 = 0.008$$

$$0.129 \times 0.691 \times 0.346 = 0.031$$

$$1.590 \times 0.131 \times 0.806 = 0.168$$

$$0.132 \times 0.805 \times 1.338 = 0.142$$

$$0.122 \times 0.261 \times 1.610 = 0.051$$

$$0.400 \text{ in}^3$$

$$\text{Use } b = 0.129 \times \frac{1 - 0.375}{1} = 0.0806''$$

Wind Speed Use 45 mph (per Joe Runser, Maintenance Supervisor, Dist. I during sign failur

$V = 45$ mph $H = 11.5'$ (Per Dwight Metcalf 10-21-91)

$C_h = 0.80$ Use $C_d = 1.12$ for sign panel

$C_d = 1.7$ (flat) for post

$$P\,(\text{On panel}) = 0.00256\,(1.3V)^2\,C_d\,C_h$$
$$= 0.00256\,(1.3 \times 45)^2 \times 1.12 \times 0.8 = 7.85\ \text{lb}/\square'$$

$$P\,(\text{On post}) = 0.00256\,(1.3 \times 45)^2 \times 1.7 \times 0.8 = 11.91\ \text{lb}/\square'$$

Section Type Marion 3 lb/

Area 0.852 in^2
I_z 0.377 in^4
S_x 0.350 in^3
r_x 0.665 in
SD 3 ft
SW 3 ft

b_f 3.480 in
t_f 0.132/0.254 in
D 1.881 in
t_w 0.258 in
r_y 1.010 in
L 11.5 ft
NP 1

PWT 3.06 lb/ft
r_t
Q 0.257
K_t
V 45 mph
F_y 80000 psi

J = 0.00752 in^4

$l_u = (L - \frac{SD}{2}) =$ 9.38 ft = 113 in

Sign Pressure $.00256(1.3*v)^2(1.12)(C_h) =$ 7.85 psf Sign Force $\frac{SP*SD*SW}{NP} =$ 70.7 lbs

Post Pressure $.00256(1.3*v)^2(1.7)(0.8) =$ 11.91 psf Post Force $PP*(\frac{b_f}{12})(L - \frac{SD}{2}) =$ 32.4 lbs

Axial Sign $\frac{3(SD)(SW)}{NP} =$ 27.0 lbs Axial = Sign + Post = 68.7 lbs

Post $PWT*(L + \frac{SD}{2}) =$ 41.7 lbs $f_a = \frac{Axial}{Area} =$ 80.6 psi

$\frac{KL}{r_x} = 2*L*\frac{12}{r_x} =$ 415 If NP=1 $\frac{KL}{r_y} = \frac{2*L*12}{r_y} =$ 273

If NP>1 $\frac{KL}{r_y} = \frac{1*(L - \frac{SD}{2})*12}{r_y} =$

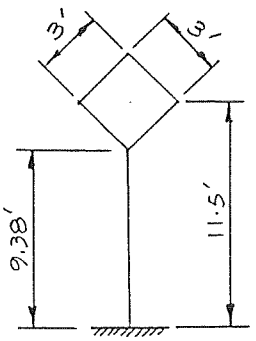

$C_c = \sqrt{\frac{2*\Pi^2*E}{F_y}} =$ 84.6 $(\frac{KL}{r})_{max} =$ 415

$(\frac{KL}{r})_{max} < C_c$ $F_a = \frac{.52F_y - .13F_y^2(\frac{KL}{r_{max}})^2}{(\Pi^2 E)} =$ _____ psi

$> C_c$ $F_a = \frac{.52*\Pi^2 E}{(\frac{KL}{r_{max}})^2} =$ 864 psi

$CSR_A = \frac{f_a}{1.4F_a} =$ 0.067

Moment Moment = (Sign Force)(L) + (Post Force) * $(\frac{L - \frac{SD}{2}}{2})$ + (Axial Sign) * $(.375 + \frac{D}{2})$ ÷ 12 = 968 ft-lbs
= 11616 in-lbs

f_b = (Moment) ÷ (S_x) = 33189 psi

$C_a = 1 - \frac{f_a}{F_{am}} =$ 0.907

$CSR_M = \frac{f_b}{1.4C_aF_b} =$ 0.545

Shear $F_v = .33 * F_y =$ 26400 psi
Shear = (Sign Force) + (Post Force) = 103.1 lbs
VS = 2.60
f_v = (Shear * VS) = 268 psi

$CSR_S = (\frac{f_v + f_{vt}}{1.4\ F_v})^2 =$ 0.251

Torsion If NP = 1 $M_z = (0.155W * 12) * (\text{Sign Force})$ 540 in-lbs
TS = 0.254/0.00752 = 33.78
$f_{vt} = M_z * TS =$ 18241 psi

$CSR = CSR_A + CSR_M + CSR_S =$ 0.863

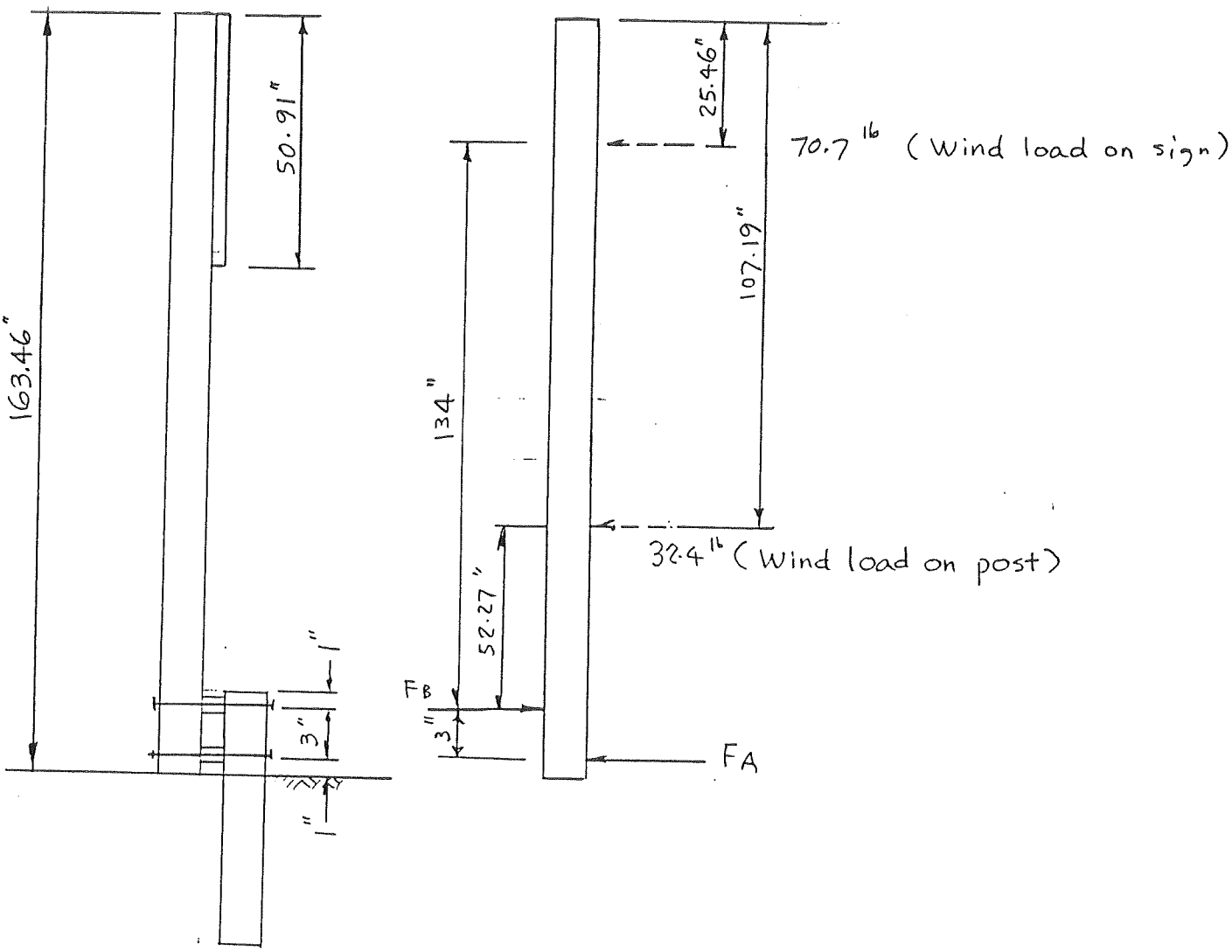

$$F_A(3) = 70.7 \times 134 + 32.4 \times 52.27$$
$$= 9473.8 + 1693.5 = 11167.3$$

$$F_A = \frac{11167.3}{3} = 3722.4^{lb}$$

$$F_B = 70.7 + 32.4 + 3722.4 = 3825.5^{lb}$$

From Dean Sicking, TTI $\frac{5}{16}''\phi$ Grade 9 bolt

Ult. load = 9000 lb

Proof load = 7500 lb

From Sht. 9, Torsional moment = 540 in-lb

From Sht. 2, Torsion moment arm = 0.8"

2 bolts $\frac{540}{2 \times 0.8} = 337.5$ lb

$3825.5 + 337.5 = 4163.0$ lb

Compression on spacer 0.75" O.D. 0.375" I.D.

$A = \frac{\pi}{4} \times 0.75^2 - \frac{\pi}{4} \times 0.375^2 = 0.4418 - 0.1105 = 0.3313 \square''$

Bearing stress $= \frac{4163.0}{0.3313} = 12600$ psi

Assume A36 steel Use $F_b = 20000 \times 1.4 = 28000$ psi > 12600 OK

Ultimate load on bolt = 9 K

$S.F. = \frac{9000}{4163} = 2.16$

(For 60 mph wind, load on bolt $= 4163 \times 60^2/45^2 = 7401$ lb)

From torsion: $a = 0.43''$ $\frac{3}{4}''\phi$ spacer and washer

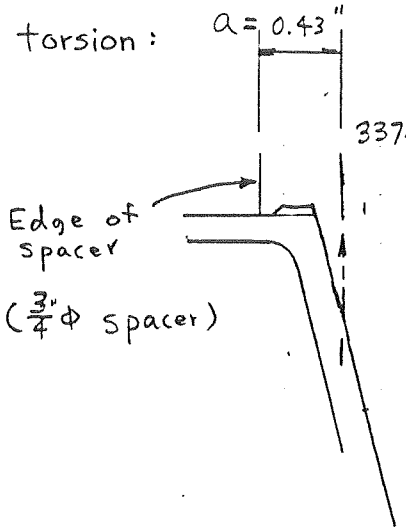

337.5×2 bolts $= 675^{lb}$

$M = 675 \times 0.43 = 290''\text{-}lb$

$t = 0.129''$ assume a segment of $b = 5 + 1.5 = 6.5''$ acting

$$f_b = \frac{290 \times 6}{6.5 \times 0.129^2} = 16100 \text{ psi}$$

@ ℄ of web with holes $b = 6.5 - 6 \times 0.375 = 4.25''$

$$f_v = \frac{675 \times 1.5}{6.5 \times 0.129} = 1208 \text{ psi}$$

From bending
Top bolt
$b = 1.5 + 1.5 = 3''$
@ ℄ web
with holes
$b = 3 - 3 \times 0.375$
$= 1.875''$
Bottom bolt
$b = 1.5 + 1 = 2.5''$
@ ℄ of web
with holes
$b = 2.5 - 2 \times 0.375$
$= 1.75''$
Bottom bolt critical

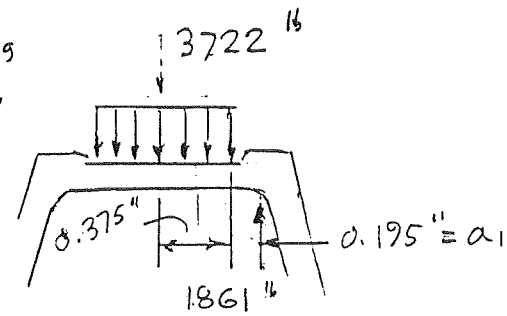

$M = 1861 \times 0.195 = 363''\text{lb}$

Use $b = 2.5''$

$$f_b = \frac{363 \times 6}{2.5 \times 0.129^2} = 52400 \text{ psi}$$

Total $f_b = 16100 + 52400 = 68500$ psi $> 80000 \times 0.55 \times 1.4 = 61600$

$$f_v = \frac{1861 \times 1.5}{2.5 \times 0.129} = 8656 \text{ psi}$$

Total $f_v = 1208 + 8656 = 9864$ psi $< 90000 \times 0.33 \times 1.4 = 37000$

@ ℄ of web with holes - Assume same moments occur

$$f_b = 16100 \times \frac{6.5}{4.25} + 52400 \times \frac{2.5}{1.75} = 16100 \times 1.53 + 52400 \times 1.43$$

$$= 24600 + 74900 = 99500 \text{ psi} > 61600$$

$$f_v = 1208 \times 1.53 + 8656 \times 1.43 = 1848 + 12378 = 14226 \text{ psi} < 37000$$

Vibration and Fatigue

$I = 0.418 \text{ in}^4$

$W = 3 \text{ lb}/' = 0.25 \text{ lb/in}$

$g = 32.2 \text{ ft/sec}^2 = 386.4 \text{ in/sec}^2$

$$m = \frac{0.25}{386.4} = 0.000647 \frac{\text{lb-sec}^2}{\text{in}^2} \qquad L = 13.6' = 163 \text{ in}$$

$E = 29000000 \text{ psi}$

$$f_n = \frac{1.75}{\pi}\sqrt{\frac{EI}{mL^4}} = \frac{1.75}{\pi}\sqrt{\frac{29000000 \times 0.418}{0.000647 \times 163^4}} = 2.87/\text{sec}$$

$S_n = 0.15 \qquad b = 1.88'' = 0.157'$

$$V_c = \frac{f_n b}{S_n} = \frac{2.87 \times 0.157}{0.15} = 3.00 \text{ ft/sec}$$

$$= \frac{\frac{3}{5280}}{\frac{1}{60 \times 60}} = 2.05 \text{ mph}$$

$P = 0.00256 (V_c)^2 C_d C_h$

$= 0.00256 \times 2.05^2 \times 1.12 \times 0.8 = 0.00964 \text{ lb}/\square'$

$$\frac{1}{2\beta} = 100$$

$$P_t = \frac{P}{2\beta} = 0.00964 \times 100 = 0.964 \text{ lb}/\square'$$

Small

MATERIAL LIST			14 of 27
MARK	No. REQ'D.	DESCRIPTION	MAT'L.

Section properties calculated from the dimensions below:

- Area $A = 0.852\ in^2$ (1.037)
- Moment of Inertia $I = 0.377\ in^4$ (0.477)
- Section modulus $S = 0.350\ in^3$ (0.435)
- Coefficient for shear stress $Q/bI = 2.60\ /in^2$ (2.15)
- Torsional resistance $J = 0.0079\ in^4$ (0.0134)

Numbers in ( ) are those used by Structures Section

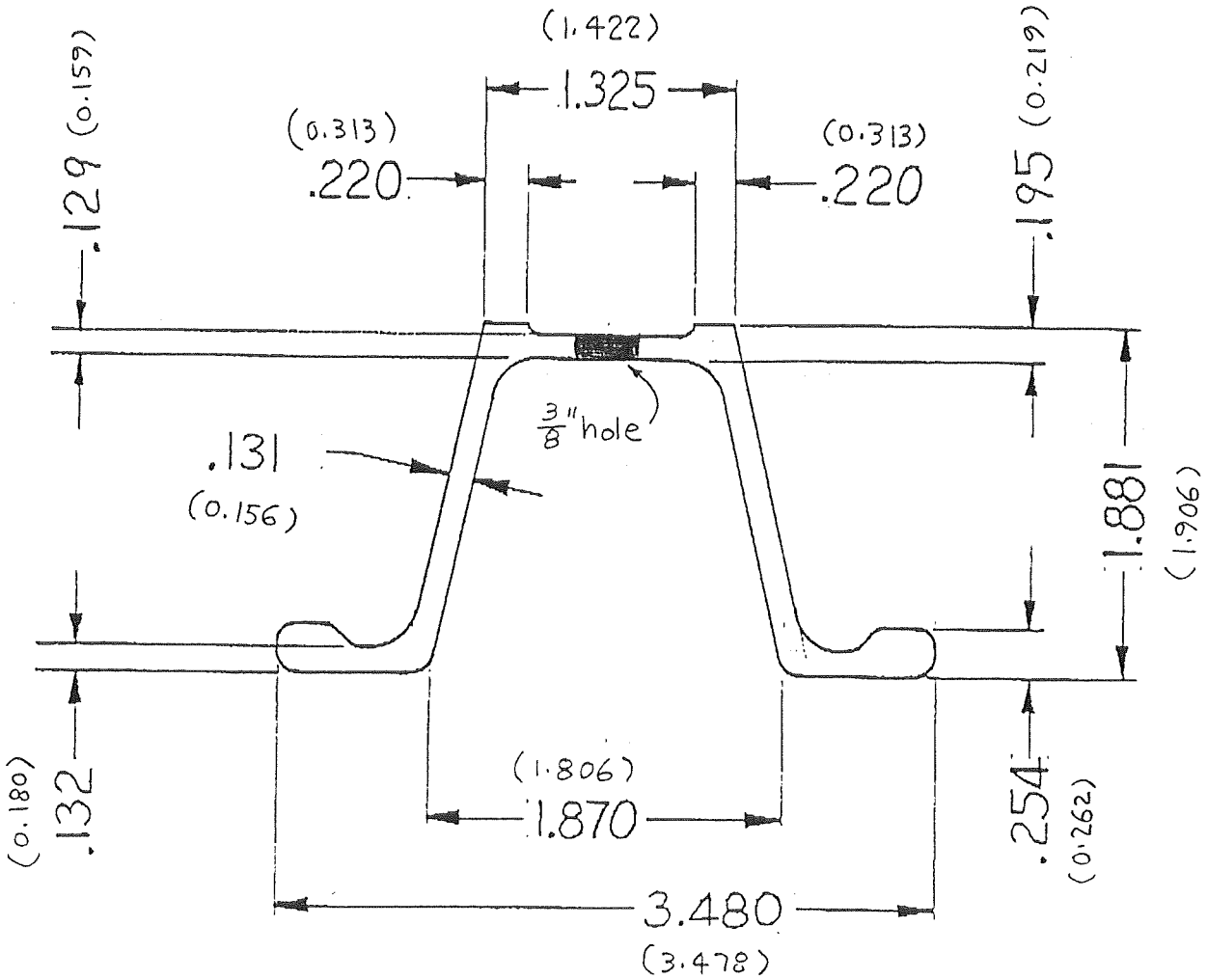

SCALE	PARTS LIST	DO NOT SCALE BLUE PRINT Read All Notes Before Starting Work	MARION STEEL COMPANY
NONE			912 CHENEY AVE. MARION, OHIO
LOCATION			
UNIT: 3 Lb SIGN POST	DRAWN: AK	DATE: 1-20-83	DRAWING No.
SUBJECT	CHECKED	DATE	RM-NO 3 SP
	APPROVED	DATE	

$\frac{1}{2}$"ϕ nut and $\frac{3}{4}$"ϕ washer w/ $\frac{3}{8}$"ϕ hole

from Sht. 11 Bearing stress = 13400 psi

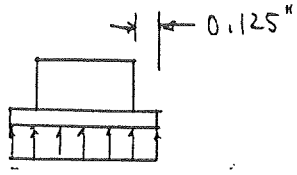

$$M = \frac{1}{2} \times 13400 \times 0.125^2 = 105^{\text{"-lb}} / \text{equiv. in}$$

$$\frac{1.105 \times 6}{1 \times h^2} = 20000 \times 1.4 = 28000$$

$$h^2 = \frac{105 \times 6}{28000} = 0.0225$$

$h = 0.150$" req'd

$$V = 13400 \times 0.125 = 1675^{\text{lb}} \qquad f_v = \frac{1675 \times 1.5}{1 \times 0.15} = 16750 \text{ psi}$$

$< 36000 \times 1.4 \times 0.33$

$= 16632 \doteq 16750$

say ok

Try $\frac{1}{2}$"ϕ spacer and washer

Refer to Sht. 12

From torsion

$$a = 0.43 + \frac{1}{2}(0.75 - 0.5) = 0.555"$$

@ ℄ web $\quad f_b = 24600 \times \frac{0.555}{0.43} = 31800$ psi

From bending

$$a_1 = 0.195 + \frac{1}{2}(0.75 - 0.5) = 0.320"$$

@ ℄ web $\quad f_b = 74900 \times \frac{0.320}{0.195} = 122900$ psi

$$31800 + 122900 = 154700 \text{ psi} > 61600$$

Try $\frac{5}{8}$"φ spacer and washer

Refer to sht. 12

From torsion $a = 0.43 + \frac{1}{2}(0.75 - 0.625) = 0.493"$

@ ℄ Web $f_b = 24600 \times \frac{0.493}{0.43} = 28200$ psi

From bending

$a_1 = 0.195 + \frac{1}{2}(0.75 - 0.625) = 0.258"$

@ ℄ web $f_b = 74900 \times \frac{0.258}{0.195} = 99100$ psi

$28200 + 99100 = 127300$ psi > 61600

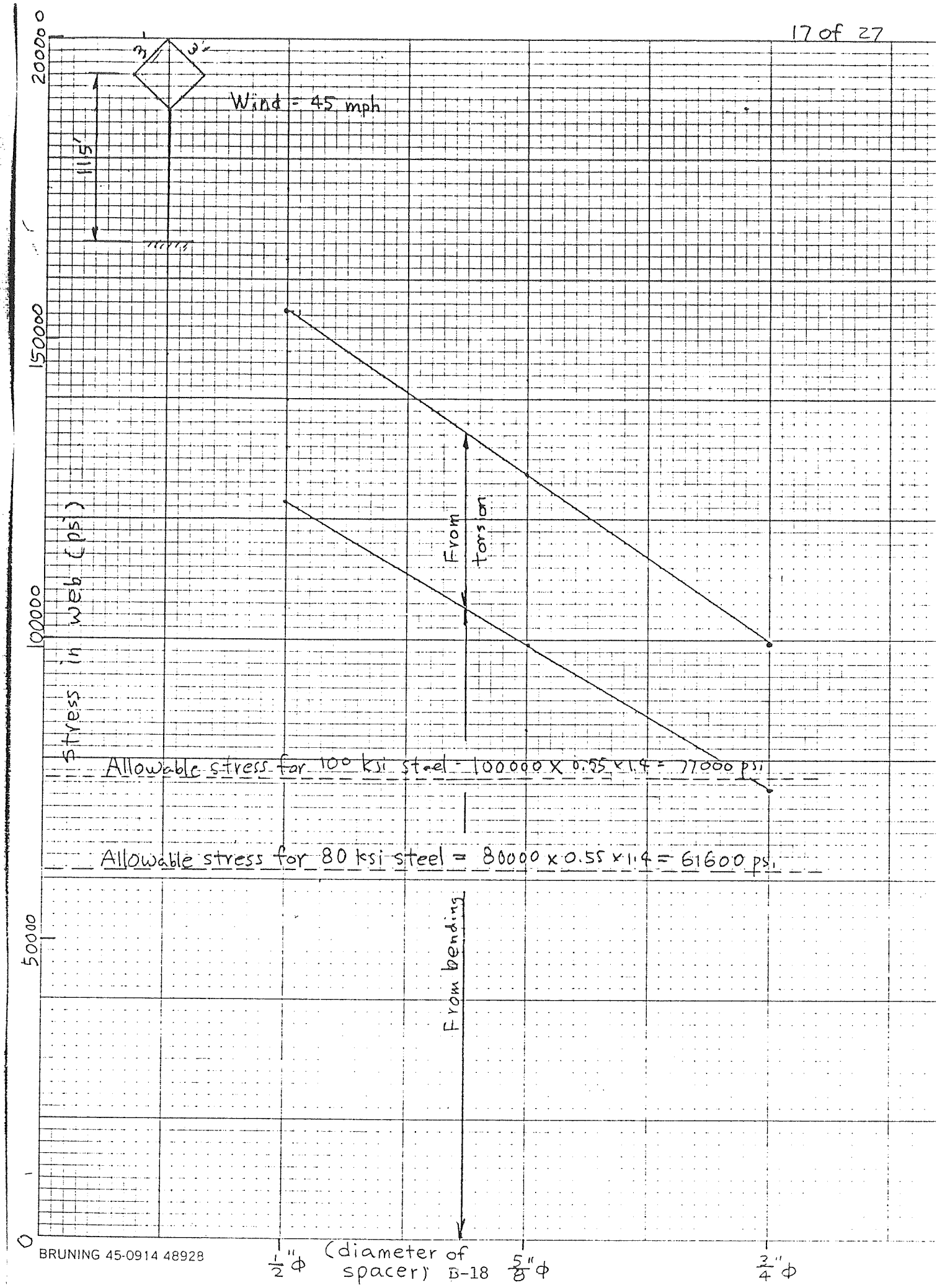

BRUNING 45-0914 48928

Section Type Marion 3 lb/

Area 0.852 in^2
I_z 0.377 in^4
S_x 0.350 in^3
r_x 0.665 in
SD 3 ft
SW 3 ft

b_f 3.480 in
t_f 0.132/0.254 in
D 1.881 in
t_w 0.258 in
r_y 1.010 in
L 11.5 ft
NP 1

PWT 3.06 lb/ft
r_1
Q 0.257
K_1
V 60 mph
F_y 80000 psi

J = 0.00752 in^4

$l_u = (L - \frac{SD}{2}) =$ 9.38 ft = 113 in

Sign Pressure $.00256(1.3*v)^2(1.12)(C_h) =$ 13.96 psf Sign Force $\frac{SP*SD*SW}{NP} =$ 125.6 lbs

Post Pressure $.00256(1.3*v)^2(1.7)(0.8) =$ 21.18 psf Post Force $PP*(\frac{b_f}{12})(L-\frac{SD}{2}) =$ 57.6 lbs

Axial

Sign $\frac{3(SD)(SW)}{NP} =$ 27.0 lbs Axial = Sign + Post = 68.7 lbs

Post $PWT*(L+\frac{SD}{2}) =$ 41.7 lbs $f_a = \frac{Axial}{Area} =$ 80.6 psi

$\frac{KL}{r_x} = 2*L*\frac{12}{r_x} =$ 415 If NP=1 $\frac{KL}{r_y} = \frac{2*L*12}{r_y} =$ 273

If NP>1 $\frac{KL}{r_y} = \frac{1*(L-\frac{SD}{2})*12}{r_y} =$

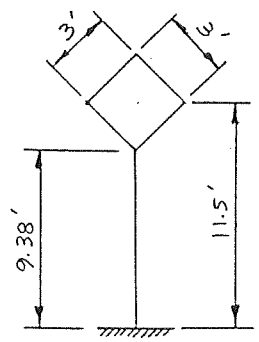

$C_c = \sqrt{\frac{2*\Pi^2*E}{F_y}} =$ 84.6 $(\frac{KL}{r})_{max} =$ 415

$(\frac{KL}{r})_{max} < C_c$ $F_a = \frac{.52F_y - .13F_y^2(\frac{Kl}{r_{max}})^2}{(\Pi^2 E)} =$ _____ psi

$> C_c$ $F_a = \frac{.52*\Pi^2 E}{(\frac{KL}{r_{max}})^2} =$ 864 psi

$CSR_A = \frac{f_a}{1.4F_a} =$ 0.067

Moment

Moment = (Sign Force)(L) + (Post Force) * $(\frac{L-\frac{SD}{2}}{2})$ + (Axial Sign) + $(.375 + \frac{D}{2})$ + 12 = 1717 ft-lbs
= 20604 in-lbs

f_b = (Moment) ÷ (S_x) = 58869 psi

$C_a = 1 - \frac{f_a}{F_{am}} =$ 0.907

$CSR_M = \frac{f_b}{1.4C_aF_b} =$ 0.966

Shear

$F_v = .33 * F_y =$ 26400 psi
Shear = (Sign Force) + (Post Force) = 183.2 lbs
VS = 2.60
f_v = (Shear * VS) = 476 psi

$CSR_S = (\frac{f_v + f_{vt}}{1.4\ F_v})^2 =$ 0.791

Torsion If NP = 1 $M_z = (0.155W * 12) * (\text{Sign Force})$ 959 in-lbs
TS = 0.254/0.00752 = 33.78
$f_{vt} = M_z * TS =$ 32395 psi

$CSR = CSR_A + CSR_M + CSR_S =$ 1.824

2" Bolt Spacing

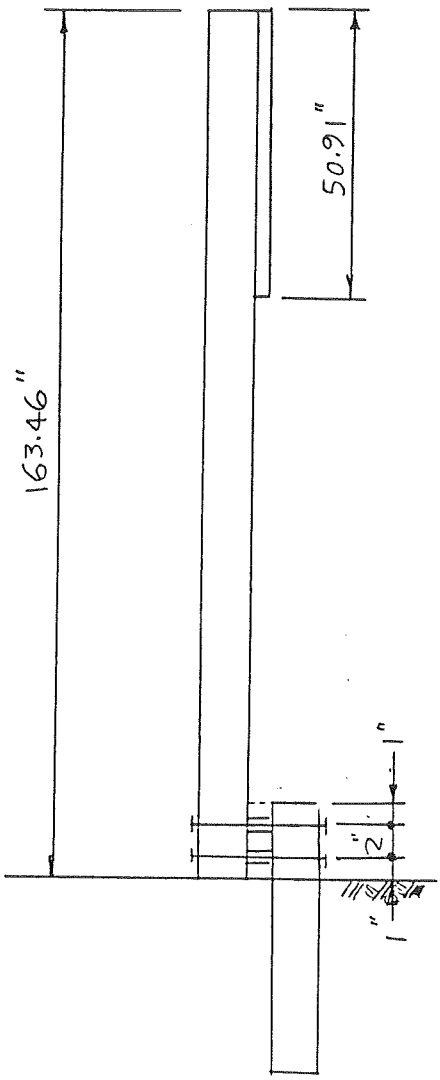

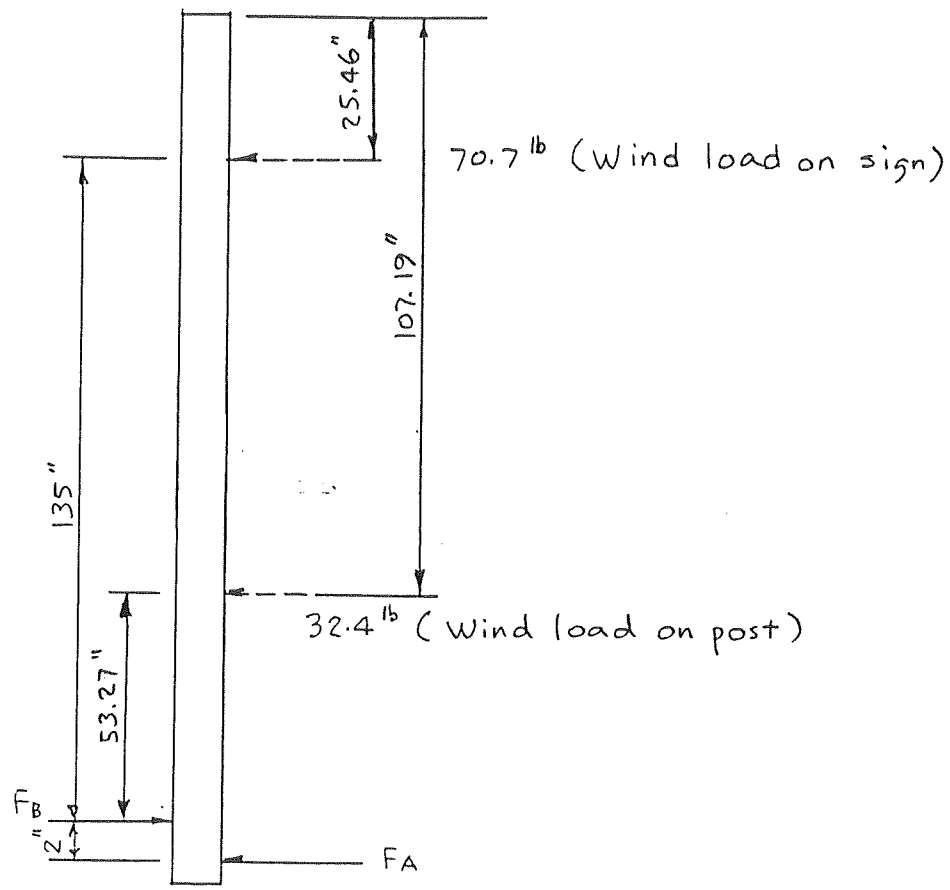

$$F_A(2) = 70.7 \times 135 + 32.4 \times 53.27$$
$$= 9544.5 + 1725.9 = 11270.4$$

$$F_A = \frac{11270.4}{2} = 5635.2 \text{ lb}$$

$$F_B = 70.7 + 32.4 + 5635.2 = 5738.3 \text{ lb}$$

From Dean Sicking, TTI $\frac{5}{16}''\phi$ Grade 9 bolt

Ult. load = 9000 lb

Proof load = 7500 lb

From Sht. 9, Torsional moment = 540 "lb

From Sht. 2, Torsion moment arm = 0.8"

2 bolts $\frac{540}{2 \times 0.8} = 337.5$ lb

$5738.3 + 337.5 = 6075.8$ lb

Compression on spacer 0.75" O.D. 0.375" I.D.

$A = \frac{\pi}{4} \times 0.75^2 - \frac{\pi}{4} \times 0.375^2 = 0.4418 - 0.1105 = 0.3313 \square''$

Bearing stress $= \frac{6075.8}{0.3313} = 18300$ psi

Assume A36 steel $F_b = 20000 \times 1.4 = 28000$ psi > 19600 ok

Ultimate load on bolt = 9^k

$S.F. = \frac{9000}{6075.8} = 1.48$

From torsion $\frac{3}{4}''\phi$ spacer and washer

Refer to Sht. 12 $M = 290''^{lb}$ $V = 675^{lb}$ Assume $b = 4 + 1.5 = 5.5''$ acting

$t = 0.129''$ $f_b = \frac{290 \times 6}{5.5 \times 0.129^2} = 19000$ psi $f_v = \frac{675 \times 1.5}{5.5 \times 0.129} = 1427$ psi

@ ℄ of web with holes $b = 5.5 - 5 \times 0.375 = 3.63''$

From bending

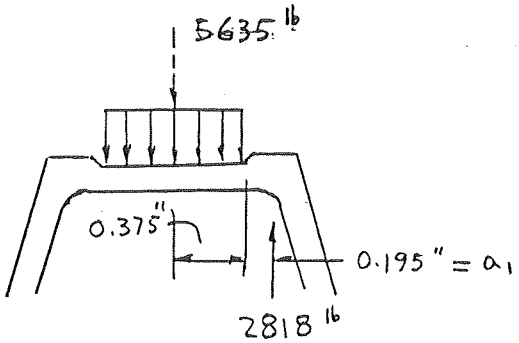

$M = 2818 \times 0.195 = 550''^{lb}$

Top bolt
$b = 1 + 1.5 = 2.5''$
@ ℄ of web w/ hole
$b = 2.5 - 2.5 \times 0.375$
$= 1.56''$

$f_b = \frac{550 \times 6}{2 \times 0.129^2} = 99200$ psi

Total $f_b = 19000 + 99200 = 118200$ psi $> 80000 \times 0.55 \times 1.4$
$= 61600$

Bottom bolt
$b = 1 + 1 = 2''$
@ ℄ of web
w/ holes
$b = 2 - 1.5 \times 0.375$
$= 1.44''$

$f_v = \frac{2818 \times 1.5}{2 \times 0.129} = 16384$ psi

Bottom bolt critical

Total $f_v = 1427 + 16384 = 17811$ psi $< 80000 \times 0.33 \times 1.4$
$= 37000$

@ ℄ of web with holes - Assume same moments occur

$$f_b = 19000 \times \frac{5.5}{3.63} + 99200 \times \frac{2}{1.44} = 19000 \times 1.52 + 99200 \times 1.39$$

$$= 28900 + 137900 = 166800 \text{ psi}$$

$$f_v = 1427 \times 1.52 + 16384 \times 1.39 = 2169 + 22774 = 24943 \text{ psi} < 37000$$

$\frac{1}{2}$"ϕ spacer Refer to Sht. 12

From torsion $a = 0.43 + \frac{1}{2}(0.75 - 0.5) = 0.555"$

@ ℄ web $f_b = 28900 \times \frac{0.555}{0.43} = 37300$ psi

From bending $a_1 = 0.195 + \frac{1}{2}(0.75 - 0.5) = 0.320"$

@ ℄ web $f_b = 137900 \times \frac{0.320}{0.195} = 226300$ psi

$37300 + 226300 = 263600$ psi > 61600

$\frac{5}{8}$"ϕ spacer Refer to Sht. 12

From torsion $a = 0.43 + \frac{1}{2}(0.75 - 0.625) = 0.493"$

@ ℄ web $f_b = 28900 \times \frac{0.493}{0.43} = 33100$ psi

From bending $a_1 = 0.195 + \frac{1}{2}(0.75 - 0.625) = 0.258"$

@ ℄ web $f_b = 137900 \times \frac{0.258}{0.195} = 182500$ psi

$33100 + 182500 = 215600$ psi > 61600

4" Bolt Spacing

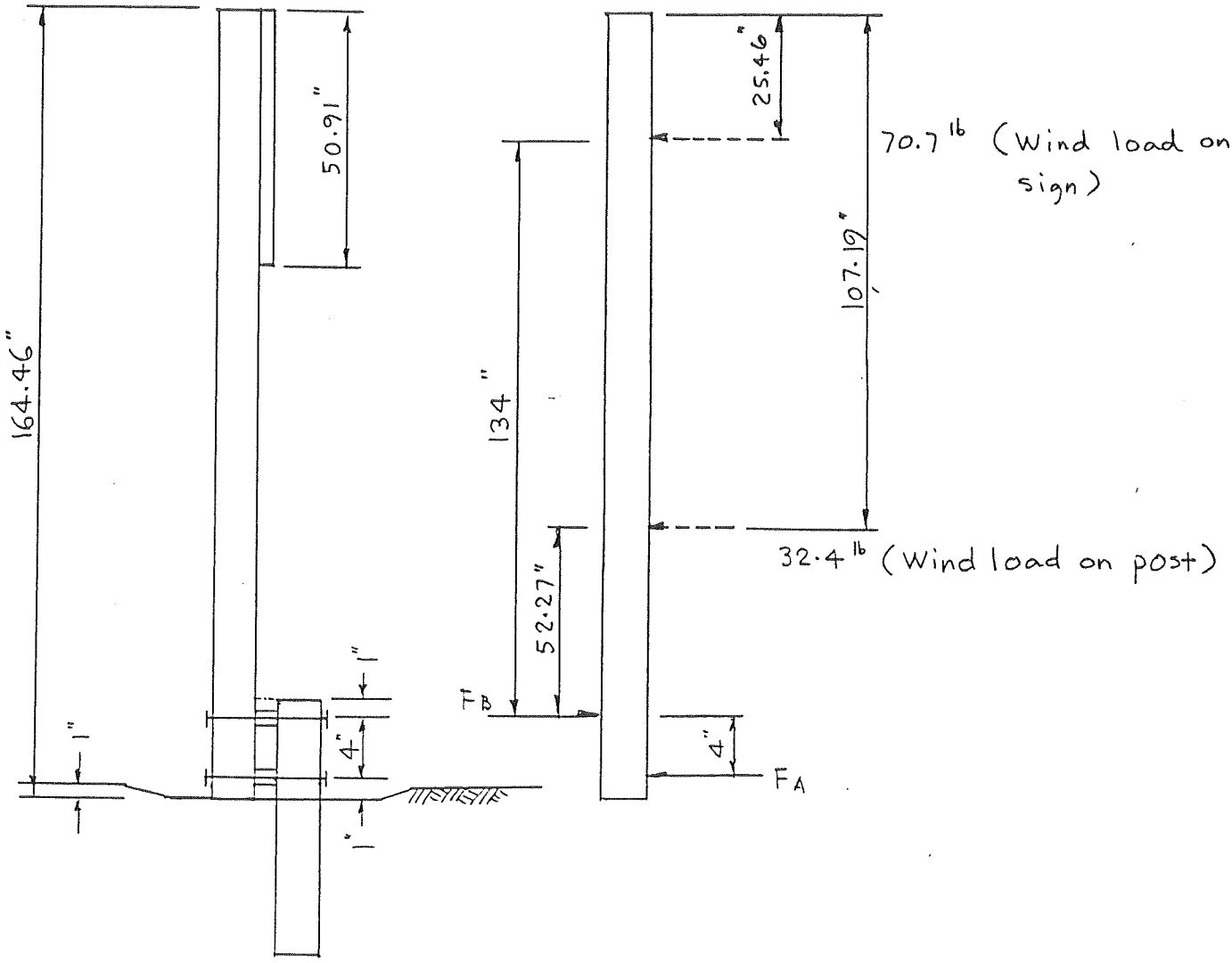

$$F_A(4) = 70.7 \times 134 + 32.4 \times 52.27$$
$$= 9473.8 + 1693.5 = 11167.3$$

$$F_A = \frac{11167.3}{4} = 2791.8 \text{ lb}$$

$$F_B = 70.7 + 32.4 + 2791.8 = 2894.9 \text{ lb}$$

From Sht. 9, Torsional moment = 540 "lb

From Sht 2, Torsion moment arm = 0.8"

2 bolts $\frac{540}{2 \times 0.8} = 337.5^{lb}$

$2894.9 + 337.5 = 3232.4^{lb}$

Ultimate load on bolt = 9000^{lb}

From torsion: $S.F. = \frac{9000}{3232.4} = 2.78$

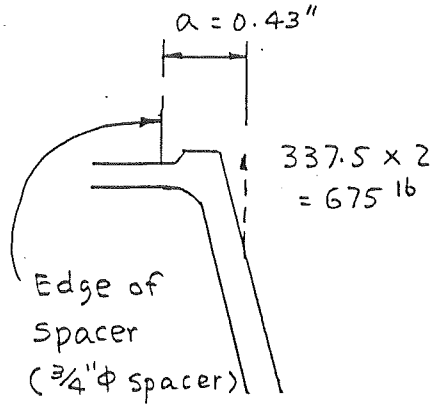

3/4"ϕ spacer and washer

$M = 675 \times 0.43 = 290$ "lb

$t = 0.129$ "

Assume a segment of b = 6.5" acting

$f_b = \frac{290 \times 6}{6.5 \times 0.129^2} = 16100$ psi

$f_v = \frac{675 \times 1.5}{6.5 \times 0.129} = 1208$ psi

@ ℄ of web with holes $b = 6.5 - 6 \times 0.375 = 4.25$"

From bending:

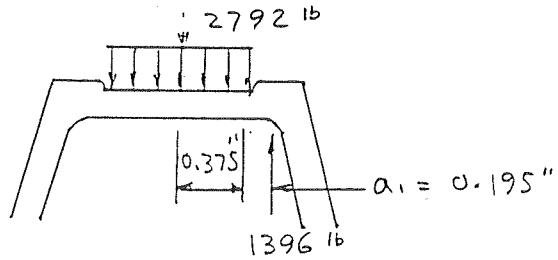

Top bolt $b = 1.5 + 1.5 = 3$" @ ℄ of web with holes
$b = 3 - 3 \times 0.375 = 1.875$"

Bottom bolt $b = 1.5 + 1.0 = 2.5$" @ ℄ of web with holes
$b = 2.5 - 2 \times 0.375 = 1.75$"

Bottom bolt critical

$M = 1396 \times 0.195 = 272$ "lb Use $b = 2.5"$

$$f_b = \frac{272 \times 6}{2.5 \times 0.129^2} = 39200 \text{ psi}$$

Total $f_b = 16100 + 39200 = 55300$ psi $< 80000 \times 0.55 \times 1.4 = 61600$

$$f_v = \frac{1396 \times 1.5}{2.5 \times 0.129} = 6493 \text{ psi}$$

Total $f_v = 1208 + 6493 = 7701$ psi $< 80000 \times 0.33 \times 1.4 = 37000$

@ ℄ of web with holes - Assume same moments occur

$$f_b = 16100 \times \frac{6.5}{4.25} + 39200 \times \frac{2.5}{1.75} = 16100 \times 1.53 + 39200 \times 1.43$$

$= 24600 + 56100 = 80700$ psi > 61600

$f_v = 1208 \times 1.53 + 6493 \times 1.43 = 1848 + 9285 = 11133$ psi < 37000

Try $\frac{1}{2}$"ϕ spacer and washer

From torsion $a = 0.43 + \frac{1}{2}(0.75 - 0.5) = 0.555"$

@ ℄ web $f_b = 24600 \times \frac{0.555}{0.43} = 31800$ psi

From bending $a_1 = 0.195 + \frac{1}{2}(0.75 - 0.5) = 0.320"$

@ ℄ web $f_b = 56100 \times \frac{0.320}{0.195} = 92100$ psi

$31800 + 92100 = 123900$ psi > 61600

Try $\frac{5}{8}$"ϕ spacer and washer

From torsion $\quad a = 0.43 + \frac{1}{2}(0.75 - 0.625) = 0.493"$

@ ℄ web $\quad f_b = 24600 \times \frac{0.493}{0.43} = 28200$ psi

From bending $\quad a = 0.195 + \frac{1}{2}(0.75 - 0.625) = 0.258"$

@ ℄ web $\quad f_b = 56100 \times \frac{0.258}{0.195} = 74200$ psi

$28200 + 74200 = 102400$ psi > 61600

Punching shear : Try $\frac{1}{2}$"ϕ spacer, 2" bolt spacing

From sht. 19 Force on bolt $= 5738^{lb}$

$$F_U = \frac{5738}{\pi \times 0.5 \times 0.129} = 28300 \text{ psi} < 80000 \times 0.33 \times 1.4 = 37000$$

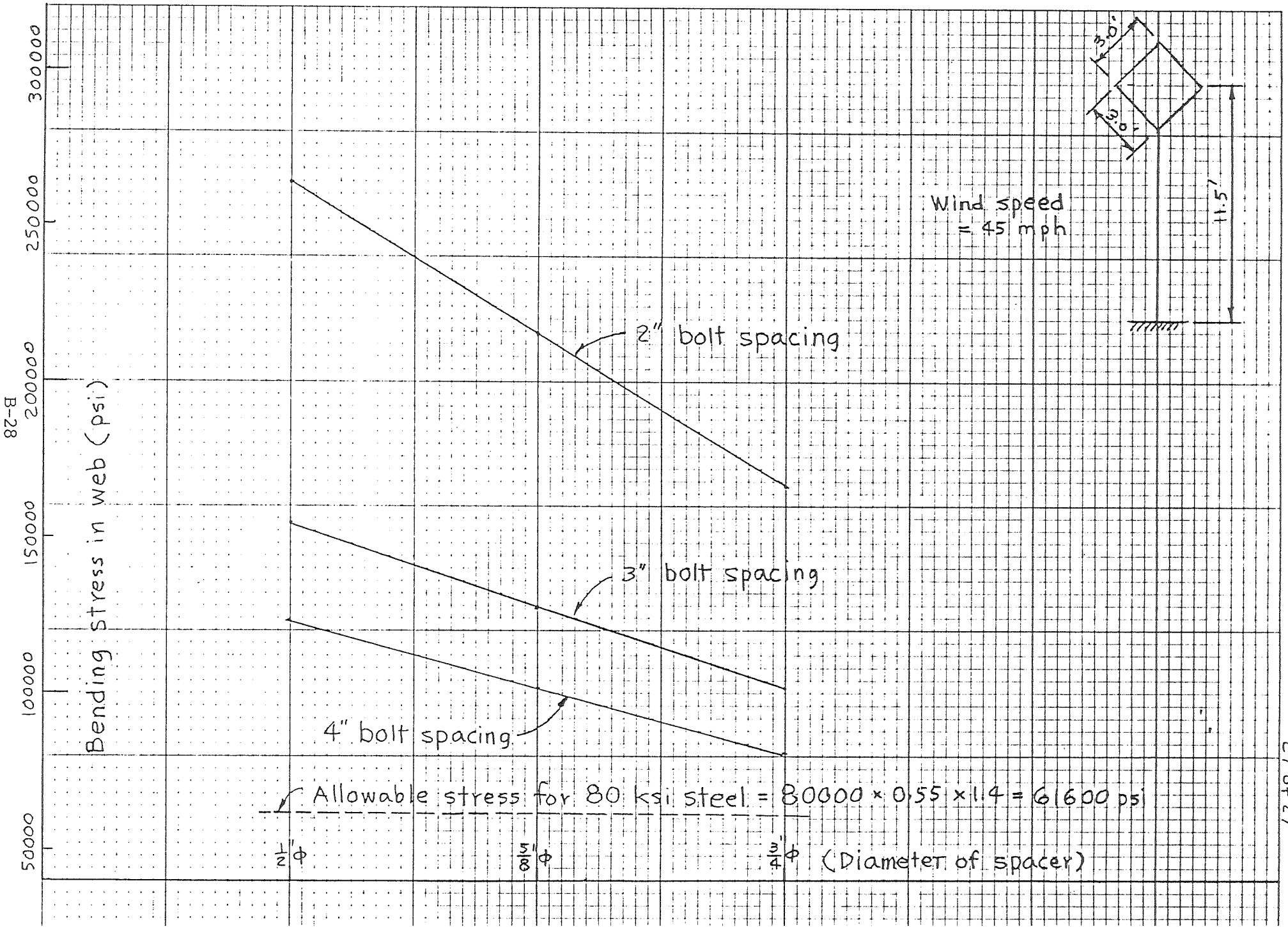
Bending stress in web (psi)
300000
250000
200000
150000
100000
50000
2" bolt spacing
3" bolt spacing
4" bolt spacing
Allowable stress for 80 ksi steel = 80000 × 0.55 × 1.4 = 61600 psi
1/2" ϕ
5/8" ϕ
3/4" ϕ
(Diameter of spacer)
Wind speed = 45 mph
3'-0"
3'-0"
11.5'

APPENDIX C:

Cross-Section Drawings for U-channel Post Suppliers

MATERIAL LIST			
MARK	No. REQ'D.	DESCRIPTION	MAT'L

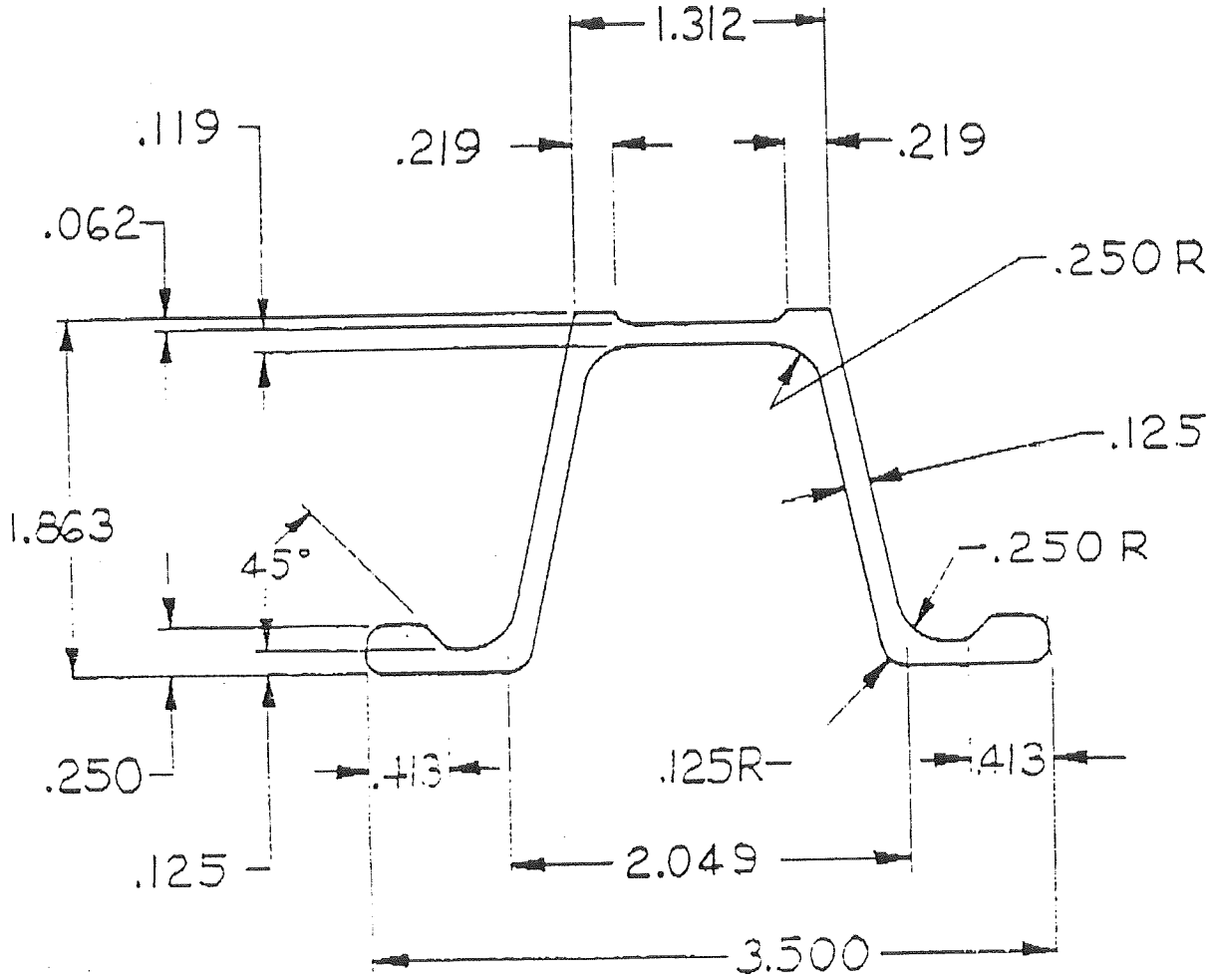

RADII NOT DIMENSIONED ARE .093

AREA: .89 IN^2

SCALE 1:1	PARTS LIST	DO NOT SCALE BLUE PRINT Read All Notes Before Starting Work	MARION STEEL COMPANY 912 CHENEY AVE. MARION, OHIO
LOCATION			
UNIT 3 Lb SIGN POST	DRAWN	DATE 11-30-83	DRAWING No. RM-SP3-10C
SUBJECT	CHECKED	DATE	
	APPROVED	DATE	

10-17-91

MATERIAL LIST			
MARK	No. REQ'D.	DESCRIPTION	MAT'L.

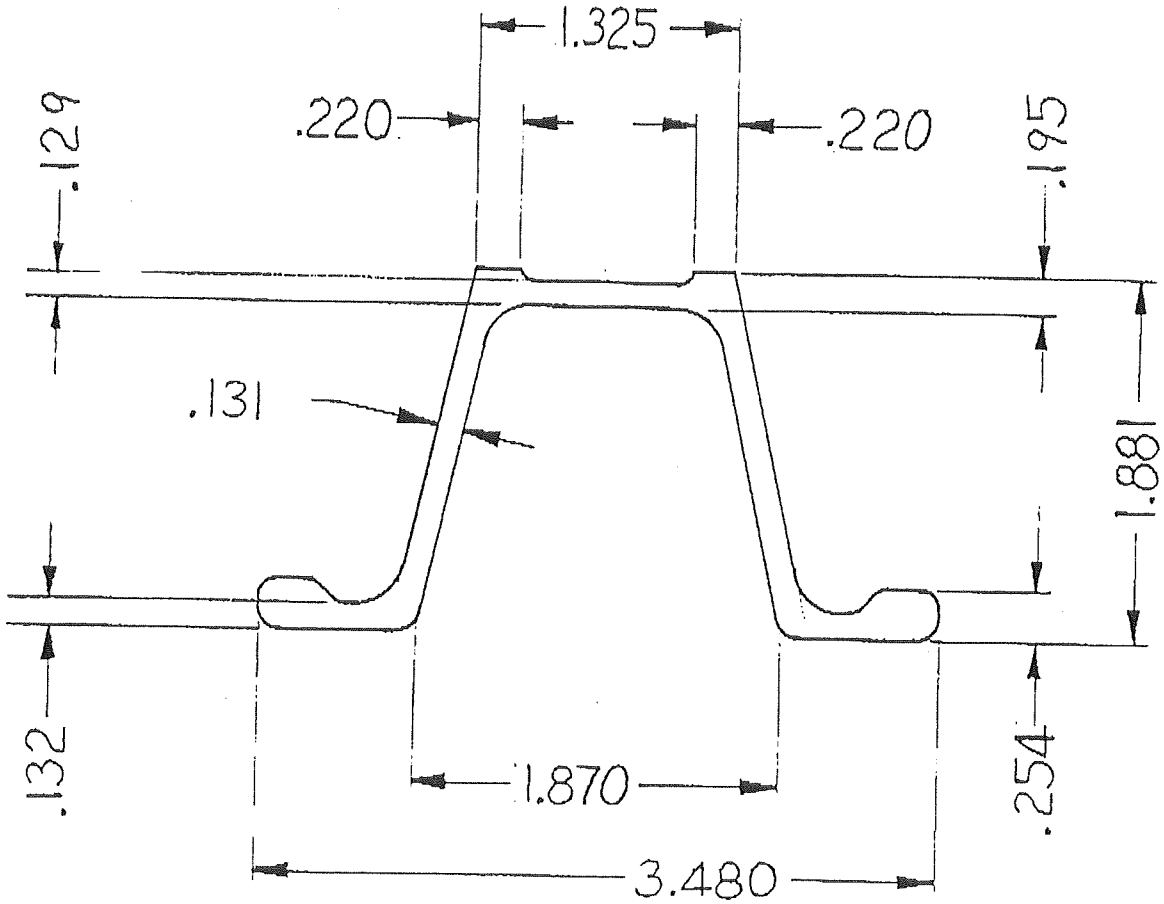

SCALE	PARTS LIST	DO NOT SCALE BLUE PRINT Read All Notes Before Starting Work	MARION STEEL COMPANY
NONE			912 CHENEY AVE. MARION, OHIO
LOCATION			
UNIT: 3 Lb SIGN POST	DRAWN: AR	DATE: 1-20-83	DRAWING No.
SUBJECT	CHECKED	DATE	RM-NO 3 SP
	APPROVED	DATE	

Franklin Steel

SIGN POST AND BASE POST

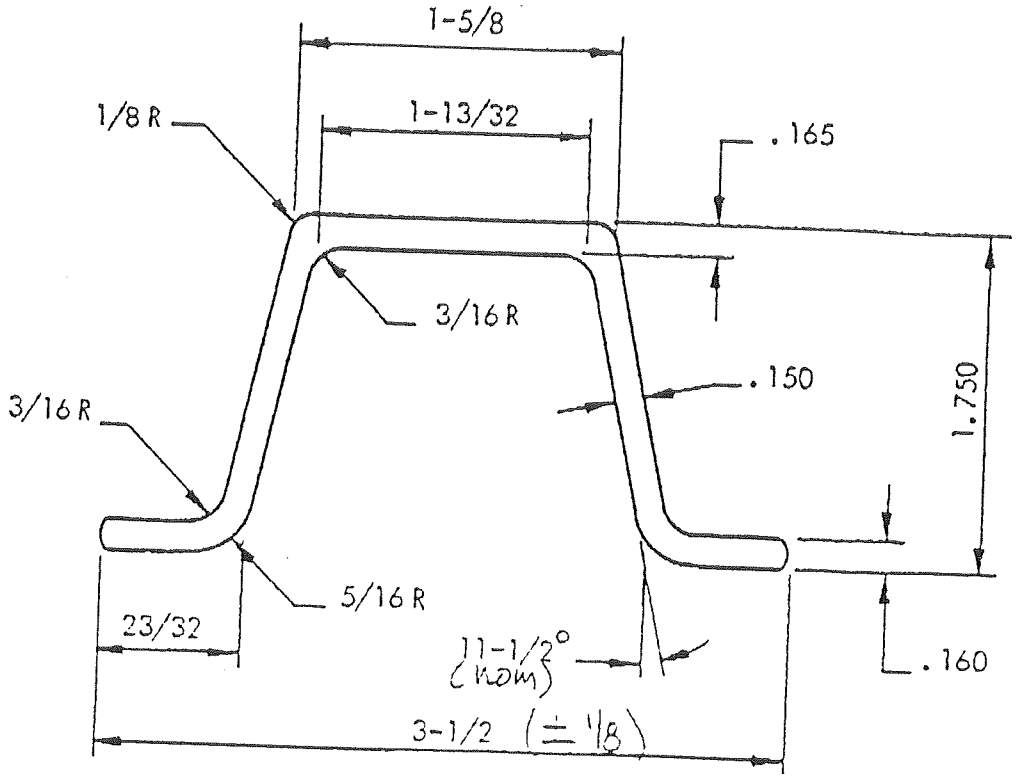

WEIGHT - 3.00 LBS/FT

AREA, A(In²) - .92

MOMENT OF INERTIA, Ix(In⁴) - .40

Iy(In⁴) - .87

SECTION MODULUS, Zx(In³) - .43

Zy(In³) - .50

Superior Strength and Finish

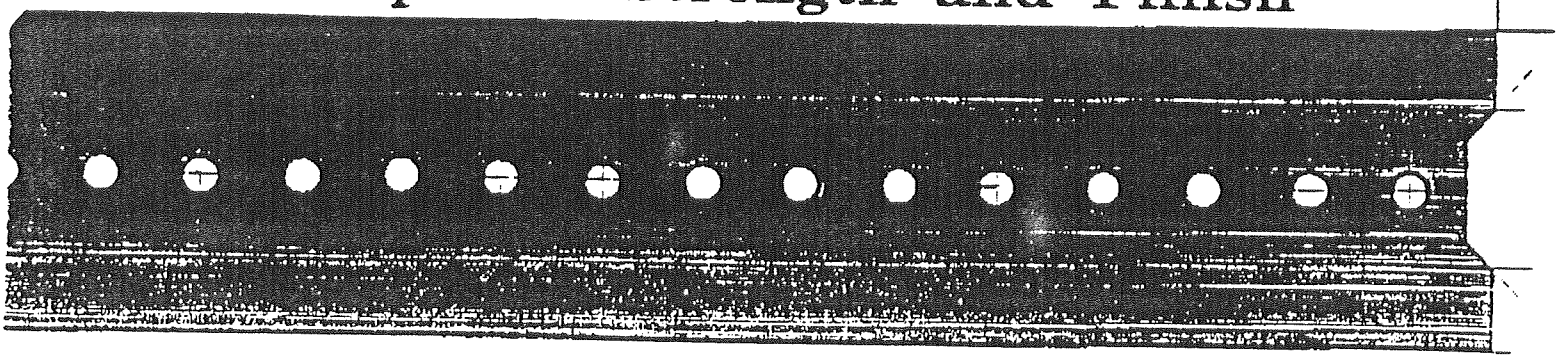

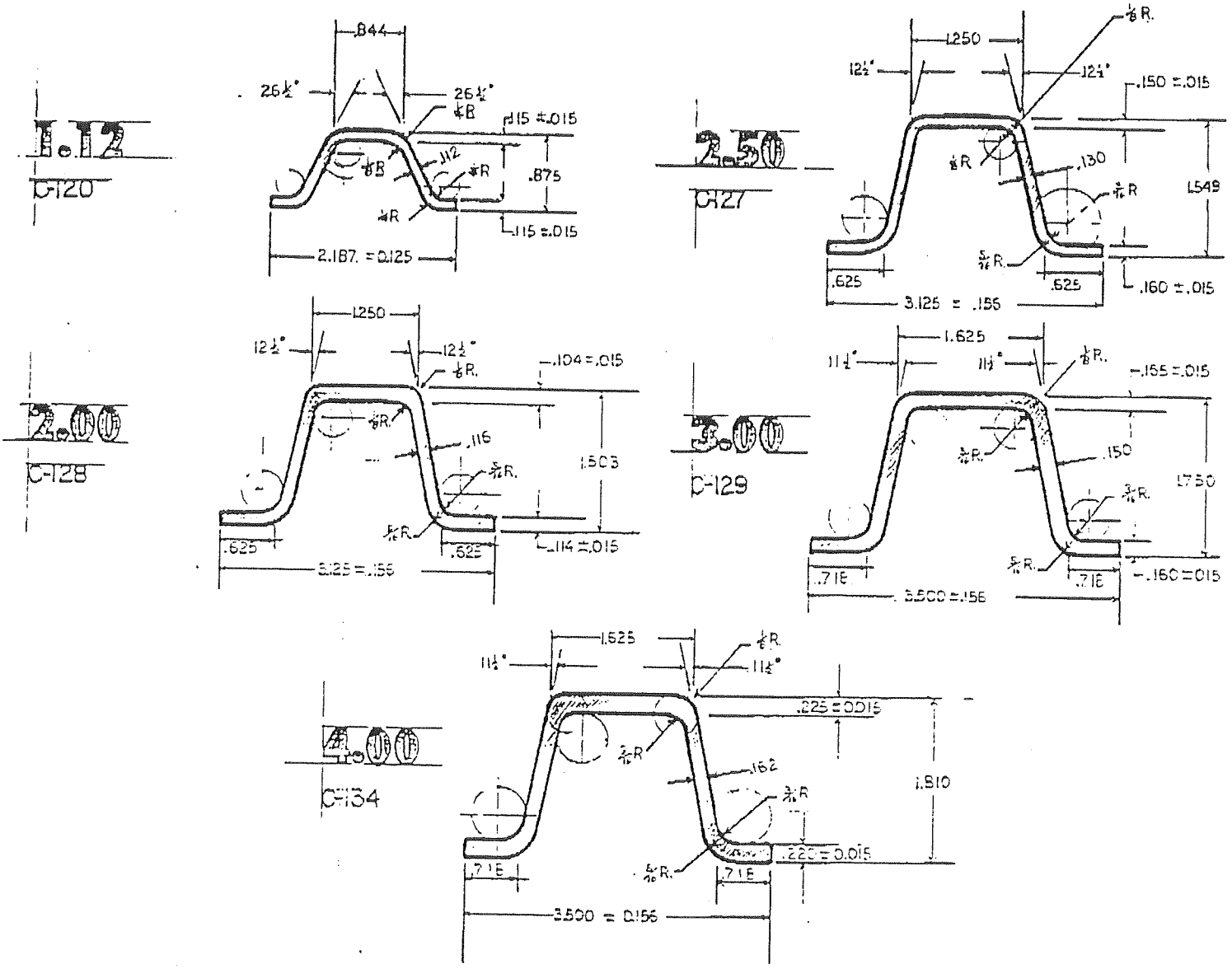

HSI

HIGHWAY STEEL, INC.

APPENDIX D:

District Traffic Engineers Survey Form

U-CHANNEL SMALL SIGN POSTS FAILURE SURVEY

PROJECT NAME AND LOCATION

NAME _____

_____ Route # _____

Project # _____ Begin mile post _____ End mile post _____

INVENTORY AND MAINTENANCE SURVEY

Number of posts installed _____ Number failed _____

Life of posts to time of failure _____ Type of posts: 3 lb/ft 80 ksi [ ] 2 lb/ft 60 ksi [ ]

Other specify: _____

FAILURE MODE

Break failure stem broke [ ] post broke [ ]

location of failure above ground -- please provide distance _____

Did bolts break? yes [ ] no [ ] Did spacers fail? yes [ ] no [ ]

Spacer type: threaded 1/2" x 5/8" [ ] unthreaded 1/2"x5/8" [ ] other [ ] _____

SIGN PANEL SIZES AND MOUNTING HEIGHTS

Sign panel size: width in feet _____ depth _____ area in square feet _____

Sign mounting height , from ground level to center of area of panel : _____feet

WEATHER CONDITIONS AT FAILURE

Temperature _____ Rain: yes [ ] no [ ] wind speed _____

Additional information _____

_____

Information given by: _____

Title _____

APPENDIX E:

Marion Steel 3 lb/ft U-channel Cross-Section Variability

Table 1 Random Measurements of Marion U-channel Sign Posts

Location	1	2	3	4	5	6	7	8
	0.1995	0.155	0.168	0.251	1.317	0.281	1.9045	3.5265
	0.1735	0.14	0.144	0.256	1.305	0.2502	1.7975	3.235
	0.158	0.1425	0.145	0.2175	1.3045	0.267	1.827	3.334
	0.17	0.1385	0.16	0.251	1.3165	0.27	1.899	3.4445
	0.177	0.1455	0.1435	0.24	1.305	0.2555	1.7745	3.445
	0.171	0.15	0.148	0.2385	1.2815		1.802	3.449
	0.163	0.142	0.154	0.2535	1.2965	0.293	1.933	3.55
	0.1825	0.15	0.143	0.2285	1.26	0.286	1.797	3.4735
	0.167	0.134	0.143	0.2515	1.312	0.293	1.84	3.4595
	0.1915	0.145	0.1575	0.246	1.29	0.267	1.8	3.3975
	0.165	0.137	0.147	0.234	1.306	0.259	1.7915	3.375
	0.1965	0.1545	0.1545	0.2525	1.3225	0.273	1.854	3.4245
	0.175	0.14		0.2235	1.295		1.86	3.4515
	0.166	0.168		0.226	1.303	0.261	1.839	3.4025
average	0.175393	0.145857	0.150625	0.240679	1.301036	0.271308	1.837071	3.426286
std dev	0.012752	0.008995	0.008124	0.01284	0.016151	0.014288	0.04826	0.078274
C.V.	0.072707	0.061667	0.053938	0.05335	0.012414	0.052665	0.02627	0.022845

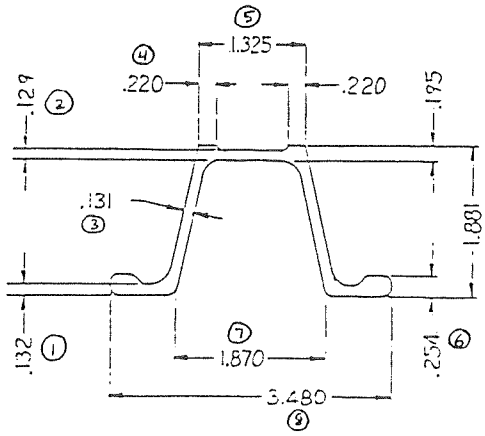

Figure 1 Marion Steel 3 #/ft U-channel Sign Post Dimensions

APPENDIX F:
Interpretation of Static Testing Results

Interpretation of Static Testing Results

12-91

Calc. by: YH, ATRC

For 2.5' x 2.5' sign, load = 330 lb

Moment arm = 9', Eccentricity = 7.2" Sign post width = 3.48"

Moment @ base of post = $\overbrace{330 \times 9}^{2970} - \overbrace{\frac{1}{2} \times 3 \times 9^2}^{121.5} = 2848.5$ ft-lb

V = Wind speed Wind pressure = $0.00256\,(1.3\,V)^2\,C_d\,C_h$

On sign panel $C_d = 1.12$ $C_h = 0.8$

$P_1 = 0.00256 \times 1.3^2 \times V^2 \times 1.12 \times 0.8 = 0.00388\,V^2$

On sign post $C_d = 1.7$ $C_d = 0.8$

$P_2 = 0.00256 \times 1.3^2 \times V^2 \times 1.7 \times 0.8 = 0.00588\,V^2$

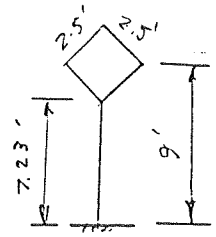

Force on sign panel $= 0.00388\,V^2 \times 2.5 \times 2.5 = 0.02425\,V^2$

Force on sign post $= 0.00588\,V^2 \times \frac{3.48}{12} \times 7.23 = 0.01233\,V^2$

Moment at base $= 0.02425\,V^2 \times 9 + 0.01233\,V^2 \times \frac{7.23}{2}$

$= 0.21825\,V^2 + 0.04457\,V^2 = 0.26282\,V^2 = 2848.5$

$V^2 = \frac{2848.5}{0.26282} = 10838$ $V = 104$ mph

---

104 mph wind $P_1 = 0.00388\,V^2 = 0.00388 \times 104^2 = 42.0$ psf

70 mph wind $P_1 = 0.00388 \times 70^2 = 19.0$ psf

$42.0 / 19.0 = 2.21$

Ck. 3-11-92

1-7-92

(Min breaking force)

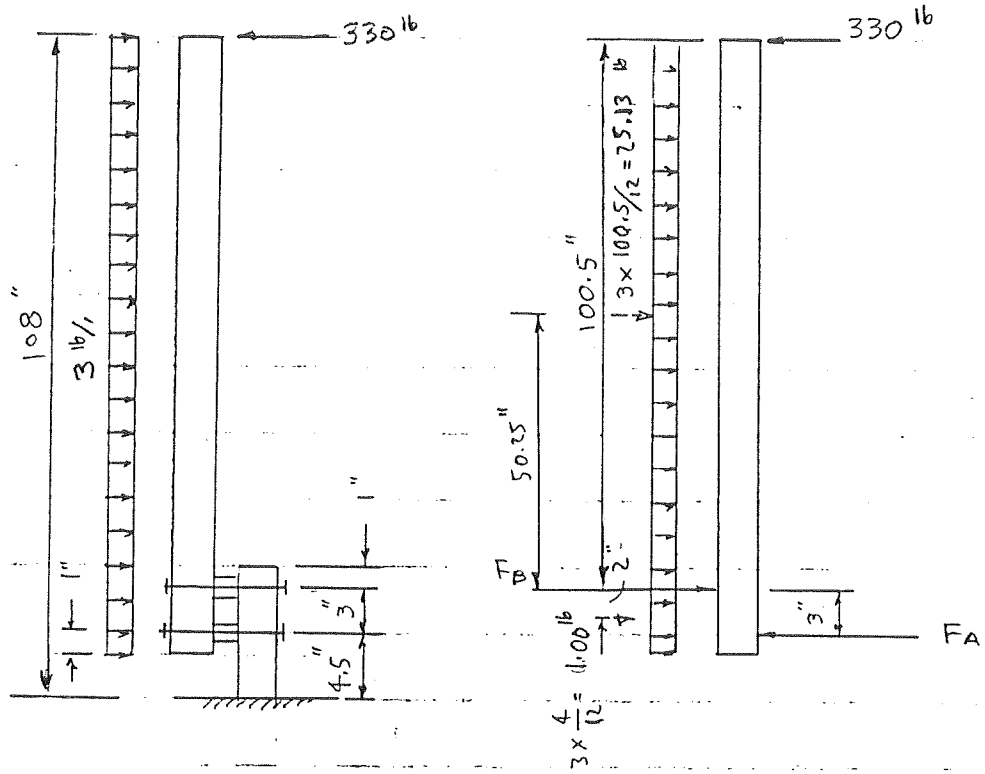

Bending: $F_A \times 3 = 330 \times 100.5 - 25.13 \times 50.25 + 1 \times 2$

$= 33165.00 - 1262.78 + 2 = 31904.22$

$$F_A = \frac{31904.22}{3} = 10635 \text{ lb}$$

$$F_B = 330 + 10635 - 25.13 - 1 = 10939 \text{ lb}$$

Torsion: $e = 7.2''$ assume resisting arm $= 0.8''$

2 bolts $\frac{330 \times 7.2}{2 \times 0.8} = 1485$ lb

$$F_B = 10939 + 1485 = 12424 \text{ lb}$$

Ultimate load per bolt = 9000 lb

Section Type Marion 3 lb/

Area 0.852 in^2 | b_f ____ in | PWT ____ lb/ft

I_z 0.377 in^4 | t_f ____ in | r_t ____

S_x 0.350/0.468 in^3 | D ____ in | Q ____

r_x 0.665 in | t_w ____ in | K_t ____

SD ____ ft | r_y ____ in | V ____ mph

SW ____ ft | L ____ ft | F_y ____ psi

NP ____

$l_u = (L - \frac{SD}{2}) =$ ____ ft = ____ in

Sign Pressure $.00256(1.3*v)^2(1.12)(C_h) =$ ____ psf Sign Force $\frac{SP*SD*SW}{NP} =$ ____ lbs

Post Pressure $.00256(1.3*v)^2(1.7)(0.8) =$ ____ psf Post Force $PP*(\frac{b_f}{12})(L - \frac{SD}{2}) =$ ____ lbs

Axial Sign $\frac{3(SD)(SW)}{NP} =$ ____ lbs Axial = Sign + Post = ____ lbs

Post $PWT*(L + \frac{SD}{2}) =$ ____ lbs $f_a = \frac{Axial}{Area} =$ ____ psi

$\frac{KL}{r_x} = 2*L*\frac{12}{r_x} =$ ____ If NP=1 $\frac{KL}{r_y} = \frac{2*L*12}{r_y} =$ ____

If NP>1 $\frac{KL}{r_y} = \frac{1*(L - \frac{SD}{2})*12}{r_y} =$ ____

$C_c = \sqrt{\frac{2*\Pi^2*E}{F_y}} =$ ____ $(\frac{KL}{r})_{max} =$ ____

$(\frac{KL}{r})_{max} < C_c$ $F_a = \frac{.52F_y - .13F_y^2(\frac{Kl}{r_{max}})^2}{(\Pi^2 E)} =$ ____ psi

$> C_c$ $F_a = \frac{.52*\Pi^2 E}{(\frac{KL}{r_{max}})^2} =$ ____ psi

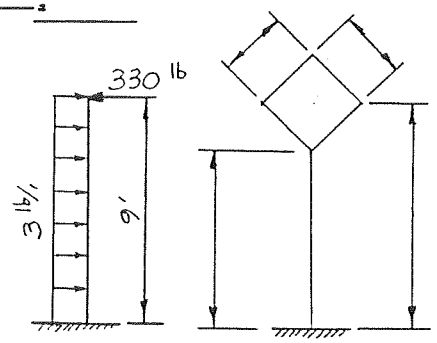

$CSR_A = \frac{f_a}{1.4F_a} =$ 0

$330 \times 9 - \frac{1}{2} \times 3 \times 9^2 = 2970 - 121.5$

Moment Moment = (Sign Force)(L) + (Post Force) * $(L - \frac{SD}{2})$ + (Axial Sign) + $(.375 + \frac{D}{2}) + 12 =$ 2848.5 ft-lbs

f_b = (Moment) ÷ (S_x) = 97663/73038 psi = 34182 in-lbs

$C_a = 1 - \frac{f_a}{F_{am}} =$ 1

$CSR_M = \frac{f_b}{1.4C_aF_b} =$ 1.453/1.087

Shear $F_v = .33 * F_y =$ 26400 psi

Shear = (Sign Force) + (Post Force) = 330-3×9 = 303 lbs

VS = 2.60

f_v = (Shear * VS) = 788 psi

$CSR_S = (\frac{f_v + f_{vt}}{1.4\ F_v})^2 =$ ____

Torsion If NP = 1 $M_z = (0.155W * 12) * (Sign\ Force) =$ 330×7.2 = 2376 in-lbs

TS = 25.93/33.78

$f_{vt} = M_z * TS =$ 61610/80261 psi

$CSR = CSR_A + CSR_M + CSR_S =$ ____

APPENDIX G:

Structural Calculations for Pilot Testing

Section Type Marion 3 lb/

Area	0.852 in^2	b_f	3.480 in	PWT	3.06 lb/ft
I_z	0.377 in^4	t_f	in	r_t	
S_x	0.350/0.468 in^3	D	in	Q	
r_x	0.665 in	t_w	in	K_t	
SD	3 ft	r_y	1.010 in	V	70 mph
SW	3 ft	L	8 ft	F_y	80000 psi
		NP	1		

$l_u = (L - \frac{SD}{2}) =$ 5.88 ft = 70.6 in

Sign Pressure $.00256(1.3*v)^2(1.12)(C_h) =$ 18.99 psf Sign Force $\frac{SP*SD*SW}{NP} =$ 170.9 lbs

Post Pressure $.00256(1.3*v)^2(1.7)(0.8) =$ 28.83 psf Post Force $PP*(\frac{b_f}{12})(L - \frac{SD}{2}) =$ 49.2 lbs

Axial

Sign $\frac{3(SD)(SW)}{NP} =$ 27.0 lbs Axial = Sign + Post = 58.0 lbs

Post $PWT*(L + \frac{SD}{2}) =$ 31.0 lbs $f_a = \frac{Axial}{Area} =$ 68.1 psi

$\frac{KL}{r_x} = 2*L*\frac{12}{r_x} =$ 289 If NP=1 $\frac{KL}{r_y} = \frac{2*L*12}{r_y} =$ 190

If NP>1 $\frac{KL}{r_y} = \frac{1*(L - \frac{SD}{2})*12}{r_y} =$

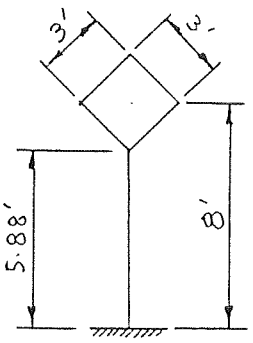

$C_c = \sqrt{\frac{2*\Pi^2*E}{F_y}} =$ 84.6 $(\frac{KL}{r})_{max} =$ 289

$(\frac{KL}{r})_{max} < C_c$ $F_a = \frac{.52F_y - .13F_y^2(\frac{KL}{r_{max}})^2}{(\Pi^2 E)} =$ psi

$> C_c$ $F_a = \frac{.52*\Pi^2 E}{(\frac{KL}{r_{max}})^2} =$ 1782 psi

$CSR_A = \frac{f_a}{1.4F_a} =$ 0.027

Moment

Moment = (Sign Force)(L) + (Post Force) * $(\frac{L - \frac{SD}{2}}{2})$ + (Axial Sign) + $(.375 + \frac{D}{2})$ + 12 = 1515 ft-lbs

f_b = (Moment) ÷ (S_x) = 51943/38846 psi = 18180 in-lbs

$C_a = 1 - \frac{f_a}{F_{am}} =$ 0.962

$CSR_M = \frac{f_b}{1.4C_aF_b} =$ 0.803/0.601

Shear

$F_v = .33 * F_y =$ 26400 psi

Shear = (Sign Force) + (Post Force) = 220.1 lbs

VS = 2.60

f_v = (Shear * VS) = 572 psi

$CSR_S = (\frac{f_v + f_{vt}}{1.4\ F_v})^2 =$ 0.866/1.458

Torsion If NP = 1 M_z = (0.155W * 12) * (Sign Force) = 1304 in-lbs

TS = 25.93/33.78

$f_{vt} = M_z * TS =$ 33813 / 44049 psi

$CSR = CSR_A + CSR_M + CSR_S =$ 1.696/2.086

Section Type Marion 3lb/1

Area 0.852 in^2
I_z 0.377 in^4
S_x 0.350/0.468 in^3
r_x 0.665 in
SD 2.5 ft
SW 2.5 ft

b_f 3.480 in
t_f 0.262 in
D ____ in
t_w ____ in
r_y 1.010 in
L 8 ft
NP 1

PWT 3.06 lb/ft
r_1 ____
Q ____
K_1 ____
V 70 mph
F_y 80000 psi

$l_u = (L - \frac{SD}{2}) =$ 6.23 ft = 74.8 in

Sign Pressure $.00256(1.3 * v)^2(1.12)(C_h) =$ 18.99 psf Sign Force $\frac{SP * SD * SW}{NP} =$ 118.7 lbs

Post Pressure $.00256(1.3 * v)^2(1.7)(0.8) =$ 28.83 psf Post Force $PP * (\frac{b_f}{12})(L - \frac{SD}{2}) =$ 52.1 lbs

Axial

Sign $\frac{3(SD)(SW)}{NP} =$ 18.8 lbs Axial = Sign + Post = 48.7 lbs

Post $PWT * (L + \frac{SD}{2}) =$ 29.9 lbs $f_a = \frac{Axial}{Area} =$ 57.2 psi

$\frac{KL}{r_x} = 2 * L * \frac{12}{r_x} =$ 289 If NP=1 $\frac{KL}{r_y} = \frac{2 * L * 12}{r_y} =$ 190

If NP>1 $\frac{KL}{r_y} = \frac{1 * (L - \frac{SD}{2}) * 12}{r_y} =$ ____

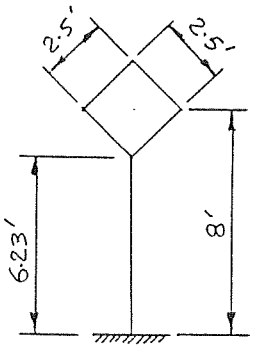

$C_c = \sqrt{\frac{2 * \Pi^2 * E}{F_y}} =$ 84.6 $(\frac{KL}{r})_{max} =$ 289

$(\frac{KL}{r})_{max} < C_c$ $F_a = \frac{.52F_y - .13F_y^2(\frac{Kl}{r_{max}})^2}{(\Pi^2 E)} =$ ____ psi

$> C_c$ $F_a = \frac{.52 * \Pi^2 E}{(\frac{KL}{r_{max}})^2} =$ 1782 psi

$CSR_A = \frac{f_a}{1.4F_a} =$ 0.023

Moment

Moment = (Sign Force)(L) + (Post Force) * $(\frac{L - \frac{SD}{2}}{2})$ + (Axial Sign) + $(.375 + \frac{D}{2})$ + 12 = 1114 ft-lbs
= 13368 in-lbs

f_b = (Moment) ÷ (S_x) = 38194 / 28564 psi

$C_a = 1 - \frac{f_a}{F_{am}} =$ 0.968

$CSR_M = \frac{f_b}{1.4C_aF_b} =$ 0.587 / 0.439

Shear

$F_v = .33 * F_y =$ 26400 psi
Shear = (Sign Force) + (Post Force) = 170.8 lbs
VS = 2.60
f_v = (Shear * VS) = 444 psi

$CSR_S = (\frac{f_v + f_{vt}}{1.4\ F_v})^2 =$ 0.294 / 0.494

Torsion

If NP = 1 $M_z = (0.155W * 12) * (Sign\ Force) =$ 756 in-lbs
TS = 25.93 / 33.78
$f_{vt} = M_z * TS =$ 19603 / 25538 psi

$CSR = CSR_A + CSR_M + CSR_S =$ 0.904 / 0.956

Section Type Marion 3 lb/

Area 0.852 in^2
I_z 0.377 in^4
S_x 0.350/0.468 in^3
r_x 0.665 in
SD 2.5 ft
SW 2.5 ft

b_f 3.480 in
t_f 0.262 in
D in
t_w in
r_y 1.010 in
L 9 ft
NP 1

PWT 3.06 lb/ft
r_t
Q 0.257
K_t
V 70 mph
F_y 80000 psi

$l_u = (L - \frac{SD}{2}) =$ 7.23 ft = 86.8 in

Sign Pressure $.00256(1.3*v)^2(1.12)(C_h) =$ 18.99 psf Sign Force $\frac{SP*SD*SW}{NP} =$ 118.7 lbs

Post Pressure $.00256(1.3*v)^2(1.7)(0.8) =$ 28.83 psf Post Force $PP*(\frac{bf}{12})(L - \frac{SD}{2}) =$ 60.4 lbs

Axial

Sign $\frac{3(SD)(SW)}{NP} =$ 18.8 lbs Axial = Sign + Post = 51.8 lbs

Post $PWT*(L + \frac{SD}{2}) =$ 33.0 lbs $f_a = \frac{Axial}{Area} =$ 60.8 psi

$\frac{KL}{r_x} = 2*L*\frac{12}{r_x} =$ 325 If NP=1 $\frac{KL}{r_y} = \frac{2*L*12}{r_y} =$ 214

If NP>1 $\frac{KL}{r_y} = \frac{1*(L - \frac{SD}{2})*12}{r_y} =$

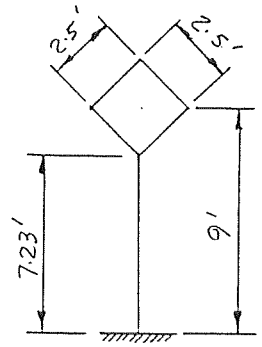

$C_c = \sqrt{\frac{2*\Pi^2*E}{F_y}} =$ 84.6 $(\frac{KL}{r})_{max} =$ 325

$(\frac{KL}{r})_{max} < C_c$ $F_a = \frac{.52F_y - .13F_y^2(\frac{Kl}{r\ max})^2}{(\Pi^2 E)} =$ psi

$> C_c$ $F_a = \frac{.52*\Pi^2 E}{(\frac{KL}{r\ max})^2} =$ 1409 psi

$CSR_A = \frac{f_a}{1.4F_a} =$ 0.031

Moment

Moment = (Sign Force)(L) + (Post Force) * $(\frac{L - \frac{SD}{2}}{2})$ + (Axial Sign) + $(.375 + \frac{D}{2})$ + 12 = 1288 ft-lbs

f_b = (Moment) ÷ (S_x) = 44160/33026 psi = 15456 in-lbs

$C_a = 1 - \frac{f_a}{F_{am}} =$ 0.957

$CSR_M = \frac{f_b}{1.4C_aF_b} =$ 0.687/0.514

Shear

$F_v = .33 * F_y =$ 26400 psi
Shear = (Sign Force) + (Post Force) = 179.1 lbs
VS = 2.60
f_v = (Shear * VS) = 466 psi

$CSR_S = (\frac{f_v + f_{vt}}{1.4\ F_v})^2 =$ 0.295/0.495

Torsion

If NP = 1 $M_z = (0.155W * 12) * (Sign\ Force) =$ 756 in-lbs
TS = 25.93/33.78
$f_{vt} = M_z * TS =$ 19603 psi
25538

$CSR = CSR_A + CSR_M + CSR_S =$ 1.013/1.040

Section Type Marion 3 lb/

Area 0.852 in^2
I_z 0.377 in^4
S_x 0.350/0.468 in^3
r_x 0.665 in
SD 2.5 ft
SW 2.5 ft

b_f 3.480 in
t_f 0.262 in
D _____ in
t_w _____ in
r_y 1.010 in
L 8.5 ft
NP 1

PWT 3.06 lb/ft
r_t _____
Q 0.257
K_t _____
V 70 mph
F_y 80000 psi

$l_u = (L - \frac{SD}{2}) =$ 6.73 ft = 80.8 in

Sign Pressure $.00256(1.3 * v)^2(1.12)(C_h) =$ 18.99 psf

Sign Force $\frac{SP * SD * SW}{NP} =$ 118.7 lbs

Post Pressure $.00256(1.3 * v)^2(1.7)(0.8) =$ 28.83 psf

Post Force $PP * (\frac{b_f}{12})(L - \frac{SD}{2}) =$ 56.3 lbs

Axial

Sign $\frac{3(SD)(SW)}{NP} =$ 18.8 lbs

Axial = Sign + Post = 50.2 lbs

Post $PWT * (L + \frac{SD}{2}) =$ 31.4 lbs

$f_a = \frac{Axial}{Area} =$ 58.9 psi

$\frac{KL}{r_x} = 2 * L * \frac{12}{r_x} =$ 307

If NP=1 $\frac{KL}{r_y} = \frac{2 * L * 12}{r_y} =$ 202

If NP>1 $\frac{KL}{r_y} = \frac{1 * (L - \frac{SD}{2}) * 12}{r_y} =$ _____

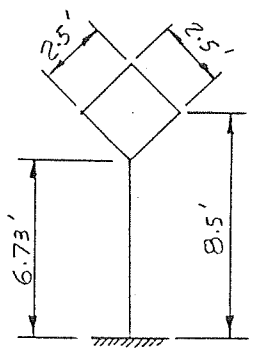

$C_c = \sqrt{\frac{2 * \Pi^2 * E}{F_y}} =$ 84.6

$(\frac{KL}{r})_{max} =$ 307

$(\frac{KL}{r})_{max} < C_c$ $F_a = \frac{.52F_y - .13F_y^2(\frac{Kl}{r_{max}})^2}{(\Pi^2 E)} =$ _____ psi

$> C_c$ $F_a = \frac{.52 * \Pi^2 E}{(\frac{KL}{r_{max}})^2} =$ 1579 psi

$CSR_A = \frac{f_a}{1.4F_a} =$ 0.027

Moment

Moment = (Sign Force)(L) + (Post Force) * $(\frac{L - \frac{SD}{2}}{2})$ + (Axial Sign) + $(.375 + \frac{D}{2})$ + 12 = 1200 ft-lbs

= 14400 in-lbs

f_b = (Moment) ÷ (S_x) = 41143/30769 psi

$C_a = 1 - \frac{f_a}{F_{am}} =$ 0.963

$CSR_M = \frac{f_b}{1.4C_aF_b} =$ 0.636/0.475

Shear

$F_v = .33 * F_y =$ 26400 psi

Shear = (Sign Force) + (Post Force) = 175.0 lbs

VS = 2.60

f_v = (Shear * VS) = 455 psi

$CSR_S = (\frac{f_v + f_{vt}}{1.4\ F_v})^2 =$ 0.295/0.495

Torsion

If NP = 1

$M_z = (0.155W * 12) *$ (Sign Force) = 756 in-lbs

TS = 25.93/33.78

$f_{vt} = M_z * TS =$ $\frac{19603}{25538}$ psi

$CSR = CSR_A + CSR_M + CSR_S =$ 0.958/0.997

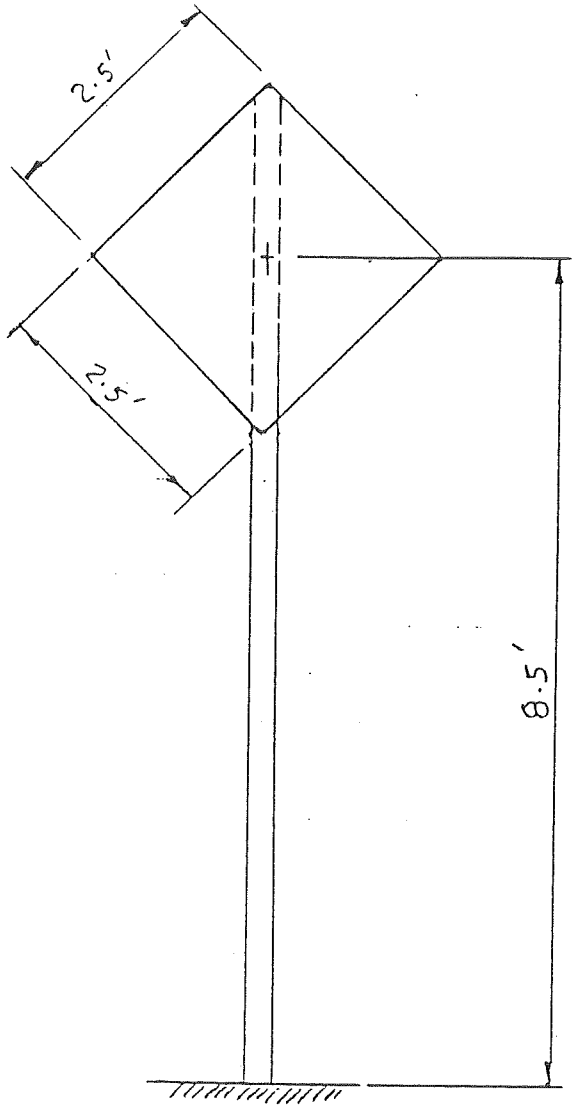

Wind speed = 70 mph

Franklin Steel

SIGN POST AND BASE POST

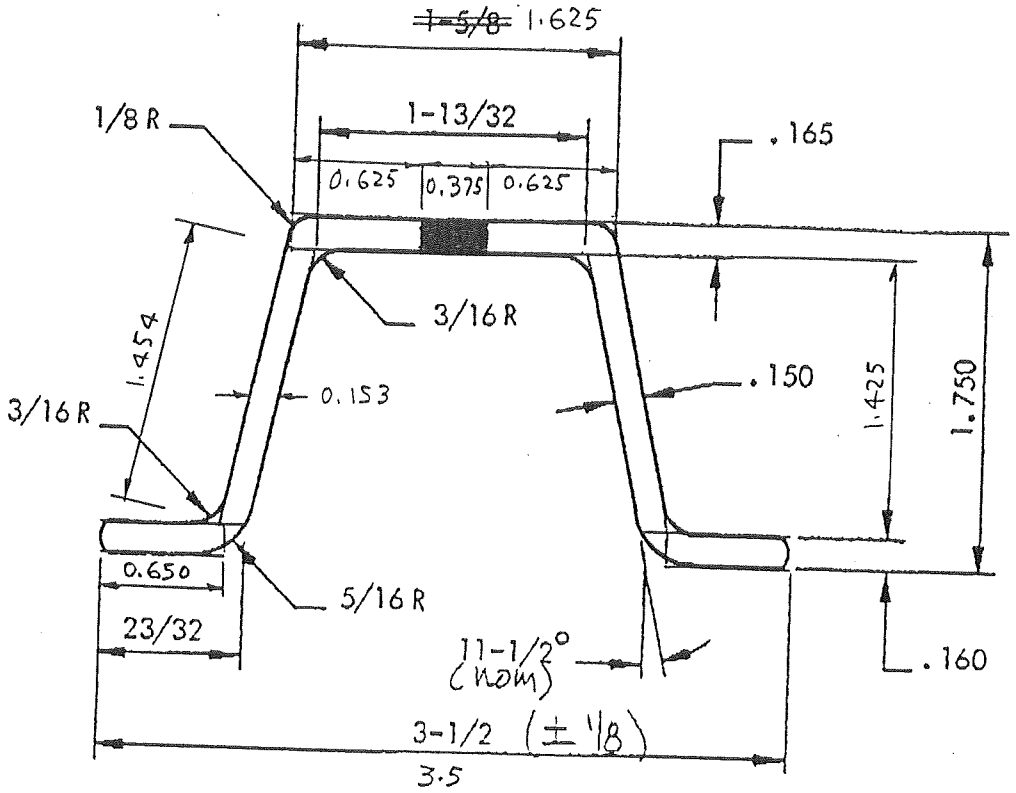

WEIGHT - 3.00 LBS/FT

AREA, A(In²) - .92

MOMENT OF INERTIA, Ix(In⁴) - .40

Iy(In⁴) - .87

SECTION MODULUS, Zx(In³) - .43

Zy(In³) - .50

DWG 600A039

Franklin 3 lb/,

W/o hole

$1.625 \times 0.165 = 0.268 \times 1.668 = 0.447$

$0.153 \times 1.425 \times 2 = 0.436 \times 0.873 = 0.381$

$0.650 \times 0.160 \times 2 = 0.208 \times 0.080 = 0.017$

$A = 0.912 \square''$ $\quad \Sigma AY = 0.845 \text{ in}^3$

$$\bar{Y} = \frac{0.845}{0.912} = 0.927''$$

$I: \frac{1}{12} \times 1.625 \times 0.165^3 = 0.0006$

$0.268 \times 0.741^2 = 0.1472$

$\frac{1}{12} \times 0.153 \times 1.425^3 \times 2 = 0.0738$

$0.436 \times 0.054^2 = 0.0013$

$\frac{1}{12} \times 0.650 \times 0.160^3 \times 2 = 0.0004$

$0.208 \times 0.847^2 = 0.1492$

0.3725 in^4

W/ $\frac{3}{8}''\phi$ hole

$0.912 \times 0.927 = 0.845$

$-(0.375 \times 0.165) = -0.062 \times 1.668 = -0.103$

$A = 0.850 \square''$ $\quad \Sigma AY = 0.742 \text{ in}^3$

$$\bar{Y} = \frac{0.742}{0.850} = 0.873''$$

I:

$$0.3725$$

$$0.912 \times 0.054^2 = 0.0027$$

$$-\left(\tfrac{1}{12} \times 0.375 \times 0.165^3\right) = -0.0001$$

$$-(0.062 \times 0.795^2) = -0.0392$$

$$0.3359 \text{ in}^4$$

$$S_t = \frac{0.3359}{0.877} = 0.383 \text{ in}^3 \qquad S_b = \frac{0.3359}{0.873} = 0.385 \text{ in}^3$$

Q:

$$0.625 \times 0.165 \times 2 \times 0.795 = 0.164$$

$$0.153 \times 0.712 \times 2 \times 0.356 = 0.078$$

$$0.242 \text{ in}^3$$

$$b = 0.150 \times 2 = 0.300''$$

$$\frac{Q}{bI} = \frac{0.242}{0.300 \times 0.3359} = 2.40 \text{ in}^{-2}$$

J:

$$2 \times 0.625 \times 0.165^3 = 0.00562$$

$$2 \times 1.454 \times 0.150^3 = 0.00981$$

$$2 \times 0.650 \times 0.160^3 = 0.00532$$

$$0.02075$$

$$J = \tfrac{1}{3} \times 0.02075 = 0.00692 \text{ in}^4$$

$$\frac{t}{J} = \frac{0.165}{0.00692} = 23.84 \text{ in}^{-3} \quad (\text{top})$$

$$\frac{t}{J} = \frac{0.160}{0.00692} = 23.12 \text{ in}^{-3} \quad (\text{bot.})$$

Section Type Franklin 3 lb/

Area 0.850 in^2
I_z 0.336 in^4
S_x 0.383/0.385 in^3
r_x 0.629 in
SD 2.5 ft
SW 2.5 ft

b_f 3.5 in
t_f 0.3 in
D ___ in
t_w ___ in
r_y ___ in
L 8.5 ft
NP 1

PWT 3.10 lb/ft
r_t ___
Q 0.242
K_t ___
V 70 mph
F_y 80000 psi

$l_u = (L - \frac{SD}{2}) =$ 6.73 ft = 80.8 in

Sign Pressure $.00256(1.3*v)^2(1.12)(C_h) =$ 18.99 psf Sign Force $\frac{SP*SD*SW}{NP} =$ 118.7 lbs

Post Pressure $.00256(1.3*v)^2(1.7)(0.8) =$ 28.83 psf Post Force $PP*(\frac{b_f}{12})(L-\frac{SD}{2}) =$ 56.6 lbs

Axial

Sign $\frac{3(SD)(SW)}{NP} =$ 18.8 lbs Axial = Sign + Post = 50.6 lbs

Post $PWT*(L+\frac{SD}{2}) =$ 31.8 lbs $f_a = \frac{Axial}{Area} =$ 59.5 psi

$\frac{KL}{r_x} = 2*L*\frac{12}{r_x} =$ 324 If NP=1 $\frac{KL}{r_y} = \frac{2*L*12}{r_y} =$ ___

If NP>1 $\frac{KL}{r_y} = \frac{1*(L-\frac{SD}{2})*12}{r_y} =$ ___

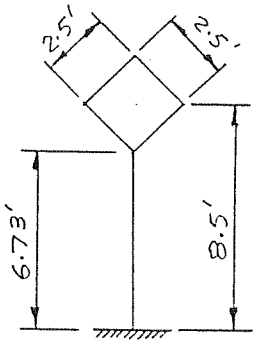

$C_c = \sqrt{\frac{2*\Pi^2*E}{F_y}} =$ 84.6 $(\frac{KL}{r})_{max} =$ 324

$(\frac{KL}{r})_{max} < C_c$ $F_a = \frac{.52F_y - .13F_y^2(\frac{Kl}{r\ max})^2}{(\Pi^2 E)} =$ ___ psi

$> C_c$ $F_a = \frac{.52*\Pi^2 E}{(\frac{KL}{r\ max})^2} =$ 1418 psi

$CSR_A = \frac{f_a}{1.4F_a} =$ 0.030

Moment

Moment = (Sign Force)(L) + (Post Force) * $(\frac{L-\frac{SD}{2}}{2})$ + (Axial Sign) + $(.375 + \frac{D}{2})$ + 12 = 1201 ft-lbs
= 14412 in-lbs

f_b = (Moment) ÷ (S_x) = 37629/ 37434 psi

$C_a = 1 - \frac{f_a}{F_{am}} =$ 0.958

$CSR_M = \frac{f_b}{1.4C_aF_b} =$ 0.585 / 0.581

Shear

$F_v = .33 * F_y =$ 26400 psi
Shear = (Sign Force) + (Post Force) = 175.3 lbs
VS = 2.40
f_v = (Shear * VS) = 421 psi

$CSR_S = (\frac{f_v + f_{vt}}{1.4\ F_v})^2 =$ 0.249/0.235

Torsion

If NP = 1 $M_z = (0.155W * 12) * (Sign\ Force) =$ 756 in-lbs
TS = 23.84/23.12
$f_{vt} = M_z * TS =$ 18023 / 17479 psi

$CSR = CSR_A + CSR_M + CSR_S =$ 0.864/0.846

Section Type Franklin 3 lb/

Area 0.850 in^2
I_z 0.336 in^4
S_x 0.383/0.385 in^3
r_x 0.629 in
SD 2.5 ft
SW 2.5 ft

b_f 3.5 in
t_f 0.3 in
D ____ in
t_w ____ in
r_y ____ in
L 8.5 ft
NP 1

PWT 3.10 lb/ft
r_1 ____
Q 0.242
K_1 ____
V 70 mph
F_y 60000 psi

$l_u = (L - \frac{SD}{2}) =$ 6.73 ft = 80.8 in

Sign Pressure $.00256(1.3 * v)^2(1.12)(C_h) =$ 18.99 psf

Sign Force $\frac{SP * SD * SW}{NP} =$ 118.7 lbs

Post Pressure $.00256(1.3 * v)^2(1.7)(0.8) =$ 28.83 psf

Post Force $PP * (\frac{b_f}{12})(L - \frac{SD}{2}) =$ 56.6 lbs

Axial

Sign $\frac{3(SD)(SW)}{NP} =$ 18.8 lbs

Axial = Sign + Post = 50.6 lbs

Post $PWT * (L + \frac{SD}{2}) =$ 31.8 lbs

$f_a = \frac{Axial}{Area} =$ 59.5 psi

$\frac{KL}{r_x} = 2 * L * \frac{12}{r_x} =$ 324

If NP=1 $\frac{KL}{r_y} = \frac{2 * L * 12}{r_y} =$ ____

If NP>1 $\frac{KL}{r_y} = \frac{1 * (L - \frac{SD}{2}) * 12}{r_y} =$ ____

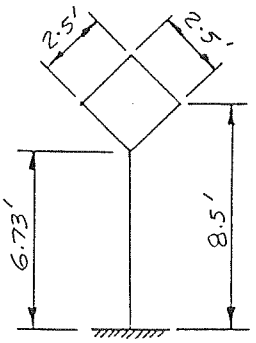

$C_c = \sqrt{\frac{2 * \Pi^2 * E}{F_y}} =$ 97.7

$(\frac{KL}{r})_{max} =$ 324

$(\frac{KL}{r})_{max} < C_c$ $F_a = \frac{.52F_y - .13F_y^2(\frac{Kl}{r_{max}})^2}{(\Pi^2 E)} =$ ____ psi

$> C_c$ $F_a = \frac{.52 * \Pi^2 E}{(\frac{KL}{r_{max}})^2} =$ 1418 psi

$CSR_A = \frac{f_a}{1.4F_a} =$ 0.030

Moment

Moment = (Sign Force)(L) + (Post Force) * $(\frac{L - \frac{SD}{2}}{2})$ + (Axial Sign) + $(.375 + \frac{D}{2}) \div 12 =$ 1201 ft-lbs

f_b = (Moment) ÷ (S_x) = 37629/37434 psi = 14412 in-lbs

$C_a = 1 - \frac{f_a}{F_{am}} =$ 0.958

$CSR_M = \frac{f_b}{1.4C_aF_b} =$ 0.779/0.775

Shear

$F_v = .33 * F_y =$ 19800 psi

Shear = (Sign Force) + (Post Force) = 175.3 lbs

VS = 2.40

f_v = (Shear * VS) = 421 psi

$CSR_S = (\frac{f_v + f_{vt}}{1.4\ F_v})^2 =$ 0.443/0.417

Torsion

If NP = 1 $M_z = (0.155W * 12) * (Sign\ Force) =$ 756 in-lbs

TS = 23.84/23.12

$f_{vt} = M_z * TS =$ 18023/17479 psi

$CSR = CSR_A + CSR_M + CSR_S =$ 1.252/1.222

Section Type Franklin 3 lb/

Area 0.850 in^2
I_z 0.336 in^4
S_x 0.383/0.385 in^3
r_x 0.629 in
SD 2.5 ft
SW 2.5 ft

b_f 3.5 in
t_f 0.3 in
D _____ in
t_w _____ in
r_y _____ in
L 8.0 ft
NP 1

PWT 3.10 lb/ft
r_t _____
Q 0.242
K_t _____
V 70 mph
F_y 60000 psi

$l_u = (L - \frac{SD}{2}) =$ 6.23 ft = 74.8 in

Sign Pressure $.00256(1.3*v)^2(1.12)(C_h) =$ 18.99 psf Sign Force $\frac{SP*SD*SW}{NP} =$ 118.7 lbs

Post Pressure $.00256(1.3*v)^2(1.7)(0.8) =$ 28.83 psf Post Force $PP*(\frac{b_f}{12})(L - \frac{SD}{2}) =$ 52.4 lbs

Axial

Sign $\frac{3(SD)(SW)}{NP} =$ 18.8 lbs Axial = Sign + Post = 49.1 lbs

Post $PWT*(L + \frac{SD}{2}) =$ 30.3 lbs $f_a = \frac{Axial}{Area} =$ 57.8 psi

$\frac{KL}{r_x} = 2*L*\frac{12}{r_x} =$ 305 If NP=1 $\frac{KL}{r_y} = \frac{2*L*12}{r_y} =$ _____

If NP>1 $\frac{KL}{r_y} = \frac{1*(L - \frac{SD}{2})*12}{r_y} =$ _____

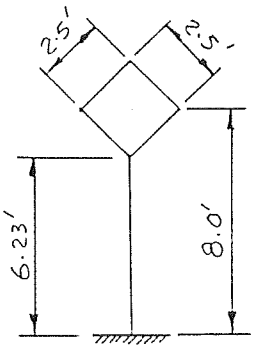

$C_c = \sqrt{\frac{2*\Pi^2*E}{F_y}} =$ 97.7 $(\frac{KL}{r})_{max} =$ 305

$(\frac{KL}{r})_{max} < C_c$ $F_a = \frac{.52F_y - .13F_y^2(\frac{KL}{r_{max}})^2}{(\Pi^2 E)} =$ _____ psi

$> C_c$ $F_a = \frac{.52*\Pi^2 E}{(\frac{KL}{r_{max}})^2} =$ 1600 psi

$CSR_A = \frac{f_a}{1.4F_a} =$ 0.026

Moment

Moment = (Sign Force)(L) + (Post Force) * $(\frac{L - \frac{SD}{2}}{2})$ + (Axial Sign) + $(.375 + \frac{D}{2})$ + 12 = 1115 ft-lbs
= 13380 in-lbs

f_b = (Moment) ÷ (S_x) = 34935/34753 psi

$C_a = 1 - \frac{f_a}{F_{am}} =$ 0.964

$CSR_M = \frac{f_b}{1.4C_aF_b} =$ 0.719/0.715

Shear

$F_v = .33 * F_y =$ 19800 psi
Shear = (Sign Force) + (Post Force) = 171.1 lbs
VS = 2.40
f_v = (Shear * VS) = 411 psi

$CSR_S = (\frac{f_v + f_{vt}}{1.4\ F_v})^2 =$ 0.442/0.417

Torsion

If NP = 1 $M_z = (0.155W * 12) * (\text{Sign Force})$ = 756 in-lbs
TS = 23.84/23.12
$f_{vt} = M_z * TS = \frac{18023}{17479}$ psi

$CSR = CSR_A + CSR_M + CSR_S =$ 1.187/1.158

Section Type Franklin 3 lb/'

Area	0.850 in^2	b_f	3.5 in	PWT	3.10 lb/ft
I_z	0.336 in^4	t_f	0.3 in	r_t	
S_x	0.383/0.385 in^3	D	in	Q	0.242
r_x	0.629 in	t_w	in	K_t	
SD	2.5 ft	r_y	in	V	70 mph
SW	2.5 ft	L	8.5 ft	F_y	60000 psi
		NP	1		

$l_u = (L - \frac{SD}{2}) =$ 7.25 ft = 87.0 in

Sign Pressure $.00256(1.3*v)^2(1.12)(C_h) =$ 18.99 psf Sign Force $\frac{SP*SD*SW}{NP} =$ 118.7 lbs

Post Pressure $.00256(1.3*v)^2(1.7)(0.8) =$ 28.83 psf Post Force $PP*(\frac{b_f}{12})(L-\frac{SD}{2}) =$ 61.0 lbs

Axial Sign $\frac{3(SD)(SW)}{NP} =$ 18.8 lbs Axial = Sign + Post = 49.0 lbs

Post $PWT*(L+\frac{SD}{2}) =$ 30.2 lbs $f_a = \frac{Axial}{Area} =$ 57.6 psi

$\frac{KL}{r_x} = 2*L*\frac{12}{r_x} =$ 324 If NP=1 $\frac{KL}{r_y} = \frac{2*L*12}{r_y} =$

If NP>1 $\frac{KL}{r_y} = \frac{1*(L-\frac{SD}{2})*12}{r_y} =$

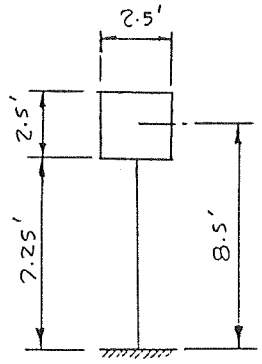

$C_c = \sqrt{\frac{2*\Pi^2*E}{F_y}} =$ 97.7 $(\frac{KL}{r})_{max} =$ 324

$(\frac{KL}{r})_{max} < C_c$ $F_a = \frac{.52F_y - .13F_y^2(\frac{KL}{r_{max}})^2}{(\Pi - E)} =$ psi

$> C_c$ $F_a = \frac{.52*\Pi^2E}{(\frac{KL}{r_{max}})^2} =$ 1418 psi

$CSR_A = \frac{f_a}{1.4F_a} =$ 0.029

Moment Moment = (Sign Force)(L) + (Post Force) * $(\frac{L-\frac{SD}{2}}{2})$ + (Axial Sign) + $(.375 + \frac{D}{2}) \div 12 =$ 1232 ft-lbs

f_b = (Moment) ÷ (S_x) = 38600/38400 psi = 14784 in-lbs

$C_a = 1 - \frac{f_a}{F_{am}} =$ 0.959

$CSR_M = \frac{f_b}{1.4C_aF_b} =$ 0.798/0.794

Shear $F_v = .33 * F_y =$ 19800 psi

Shear = (Sign Force) + (Post Force) = 179.7 lbs

VS = 2.40

f_v = (Shear * VS) = 431 psi

$CSR_S = (\frac{f_v + f_{vt}}{1.4\ F_v})^2 =$ 0.225/0.212

Torsion If NP = 1 $M_z = (0.155W * 12) * (Sign\ Force) =$ 534 in-lbs

TS = 23.84/23.12

$f_{vt} = M_z * TS =$ 12730/12346 psi

$CSR = CSR_A + CSR_M + CSR_S =$ 1.052/1.035

Section Type Marion 3lb/

Area 0.852 in^2
I_z 0.377 in^4
S_x 0.350/0.468 in^3
r_x 0.665 in
SD 3.0 ft
SW 3.0 ft

b_f 3.480 in
t_f 0.262 in
D ____ in
t_w ____ in
r_y 1.010 in
L 8.5 ft
NP 1

PWT 3.06 lb/ft
r_t ____
Q 0.257
K_t ____
V 70 mph
F_y 80000 psi

$l_u = (L - \frac{SD}{2}) =$ 6.38 ft = 76.6 in

Sign Pressure $.00256(1.3 * v)^2(1.12)(C_h) =$ 18.99 psf Sign Force $\frac{SP * SD * SW}{NP} =$ 170.9 lbs

Post Pressure $.00256(1.3 * v)^2(1.7)(0.8) =$ 28.83 psf Post Force $PP * (\frac{b_f}{12})(L - \frac{SD}{2}) =$ 53.3 lbs

Axial

Sign $\frac{3(SD)(SW)}{NP} =$ 27.0 lbs Axial = Sign + Post = 59.5 lbs

Post $PWT * (L + \frac{SD}{2}) =$ 32.5 lbs $f_a = \frac{Axial}{Area} =$ 69.8 psi

$\frac{KL}{r_x} = 2 * L * \frac{12}{r_x} =$ 307 If NP=1 $\frac{KL}{r_y} = \frac{2 * L * 12}{r_y} =$ 202

If NP>1 $\frac{KL}{r_y} = \frac{1 * (L - \frac{SD}{2}) * 12}{r_y} =$ ____

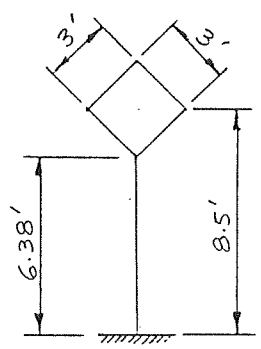

$C_c = \sqrt{\frac{2 * \Pi^2 * E}{F_y}} =$ 84.6 $(\frac{KL}{r})_{max} =$ 307

$(\frac{KL}{r})_{max} < C_c$ $F_a = \frac{.52F_y - .13F_y^2(\frac{Kl}{r\ max})^2}{(\Pi^2 E)} =$ ____ psi

$> C_c$ $F_a = \frac{.52 * \Pi^2 E}{(\frac{KL}{r\ max})^2} =$ 1579 psi

$CSR_A = \frac{f_a}{1.4F_a} =$ 0.032

Moment

Moment = (Sign Force)(L) + (Post Force) * $(\frac{L - \frac{SD}{2}}{2})$ + (Axial Sign) + $(.375 + \frac{D}{2})$ + 12 = 1626 ft-lbs
= 19512 in-lbs

f_b = (Moment) ÷ (S_x) = 55749/41692 psi

$C_a = 1 - \frac{f_a}{F_{am}} =$ 0.956

$CSR_M = \frac{f_b}{1.4C_aF_b} =$ 0.868/0.649

Shear

$F_v = .33 * F_y =$ 26400 psi
Shear = (Sign Force) + (Post Force) = 224.2 lbs
VS = 2.60
f_v = (Shear * VS) = 583 psi

$CSR_S = (\frac{f_v + f_{vt}}{1.4\ F_v})^2 =$ 0.866/1.458

Torsion

If NP = 1 $M_z = (0.155W * 12) * (Sign\ Force) =$ 1304 in-lbs
TS = 25.93/33.78
$f_{vt} = M_z * TS =$ 33813/44049 psi

$CSR = CSR_A + CSR_M + CSR_S =$ 1.766/2.139

Section Type Marion 3 lb/'

Area 0.852 in^2
I_z 0.377 in^4
S_x 0.350/0.468 in^3
r_x 0.665 in
SD 2.0 ft
SW 2.0 ft

b_f 3.480 in
t_f 0.262 in
D _____ in
t_w _____ in
r_y 1.010 in
L 8.5 ft
NP 1

PWT 3.06 lb/ft
r_1 _____
Q 0.257
K_1 _____
V 70 mph
F_y 80000 psi

$l_u = (L - \frac{SD}{2}) =$ 7.09 ft = 85.0 in

Sign Pressure $.00256(1.3*v)^2(1.12)(C_h) =$ 18.99 psf Sign Force $\frac{SP*SD*SW}{NP} =$ 76.0 lbs

Post Pressure $.00256(1.3*v)^2(1.7)(0.8) =$ 28.83 psf Post Force $PP*(\frac{b_f}{12})(L - \frac{SD}{2}) =$ 59.3 lbs

Axial Sign $\frac{3(SD)(SW)}{NP} =$ 12.0 lbs Axial = Sign + Post = 42.3 lbs

Post $PWT*(L + \frac{SD}{2}) =$ 30.3 lbs $f_a = \frac{Axial}{Area} =$ 49.6 psi

$\frac{KL}{r_x} = 2*L*\frac{12}{r_x} =$ 307 If NP=1 $\frac{KL}{r_y} = \frac{2*L*12}{r_y} =$ 202

If NP>1 $\frac{KL}{r_y} = \frac{1*(L - \frac{SD}{2})*12}{r_y} =$ _____

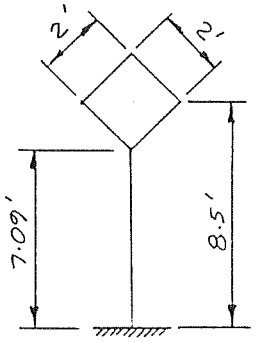

$C_c = \sqrt{\frac{2*\Pi^2*E}{F_y}} =$ 84.6 $(\frac{KL}{r})_{max} =$ 307

$(\frac{KL}{r})_{max} < C_c$ $F_a = \frac{.52F_y - .13F_y^2(\frac{KL}{r_{max}})^2}{(\Pi^2 E)} =$ _____ psi

$> C_c$ $F_a = \frac{.52*\Pi^2 E}{(\frac{KL}{r_{max}})^2} =$ 1579 psi

$CSR_A = \frac{f_a}{1.4F_a} =$ 0.022

Moment Moment = (Sign Force)(L) + (Post Force) * $(\frac{L - \frac{SD}{2}}{2})$ + (Axial Sign) * $(.375 + \frac{D}{2})$ ÷ 12 = 857 ft-lbs

f_b = (Moment) ÷ (S_x) = 29383/21974 psi = 10284 in-lbs

$C_a = 1 - \frac{f_a}{F_{am}} =$ 0.969

$CSR_M = \frac{f_b}{1.4C_aF_b} =$ 0.451/0.337

Shear $F_v = .33 * F_y =$ 26400 psi
Shear = (Sign Force) + (Post Force) = 135.3 lbs
VS = 2.60
f_v = (Shear * VS) = 352 psi

$CSR_S = (\frac{f_v + f_{vt}}{1.4\ F_v})^2 =$ 0.079/0.132

Torsion If NP = 1 $M_z = (0.155W * 12) * (Sign\ Force) =$ 387 in-lbs
TS = 25.93/33.78
$f_{vt} = M_z * TS =$ 10034/13073 psi

$CSR = CSR_A + CSR_M + CSR_S =$ 0.552/0.491

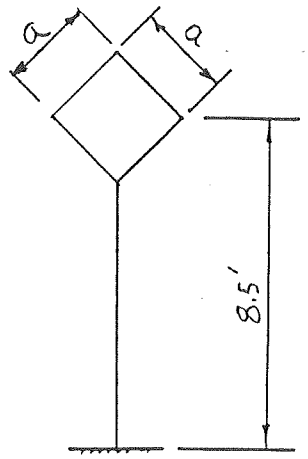

Wind = 70 mph

	Axial stress (psi)	Flexural stress (psi)	Shear & torsional stress (psi)	Combined stress index
a = 2.0'	50/2211	29383/65117	13425/36960	0.552/1.000
a = 2.5'	59/2211	41143/64714	25993/36960	0.997/1.000
a = 3.0'	70/2211	55749/64243	44632/36960	2.139/1.000

50/2211 denotes actual stress/allowable stress