MATERIALS

POLICY AND PROCEDURE

DIRECTIVES MANUAL

PREPARED BY:
ARIZONA DEPARTMENT OF TRANSPORTATION
INTERMODAL TRANSPORTATION DIVISION
MATERIALS GROUP

REVISED TO CHANGE LETTER NO. 18
(November 5, 2014)

November 5, 2014
(2 Pages)

MATERIALS
POLICY AND PROCEDURE
DIRECTIVES MANUAL

TABLE OF CONTENTS

P. P. D. NO.	EFFECTIVE DATE	SUBJECT
----	02/27/09	Introduction
1	02/27/09	Sampling, Testing, and Acceptance of Reinforcing Bars
2	02/27/09	Certification and Acceptance of Chemical and Air-Entraining Admixtures for Portland Cement Concrete
3a	04/14/10	Curing Compounds
4	02/27/09	Asphaltic Concrete Mix Design Proposals and Submittals
5a	04/14/10	Evaluation of Concrete Aggregate Sources
6	02/27/09	Provisional Seal Coat
7	02/27/09	Inspection of Concrete Batch Plants and Concrete Mixer Trucks
8	02/27/09	Sampling, Testing, and Acceptance of Emulsified Bituminous Materials
9	02/27/09	Guidelines for Inspection and Acceptance of Timber Guardrail Posts and Blocks
10	02/27/09	End Product Asphaltic Concrete Acceptance Testing – Procedure for Determination of Statistical Outliers

P. P. D. NO.	EFFECTIVE DATE	SUBJECT
11	02/27/09	Approval of Laboratories to Perform Testing of Bearing Pads for the Department
12	02/27/09	Review of Test Results and Issuance of Test Reports
13a	04/14/10	Certification and Acceptance of Hydraulic Cements, Fly Ash, Natural Pozzolan, Silica Fume, and Lime
14a	11/05/14	Testing and Certification of Bituminous Distributor Trucks
15a	04/19/13	Submittal and Approval of Portland Cement Concrete Mix Designs
16c	02/07/13	ADOT Radiation Safety Program
17	02/27/09	Acquisition, Disposal, and Use of ADOT Licensed Materials Sources and Stockpile Sites
18	02/27/09	Determining Sample Times and Locations for End Product Asphaltic Concrete
19a	11/05/14	ADOT System for the Evaluation of Testing Laboratories
20a	04/19/13	Guidance on the use of Reclaimed Asphaltic Pavement (RAP) in Asphaltic Concrete
21	01/06/11	Sampling, Testing, and Acceptance of Glass Beads (Spheres) for Striping Materials
22	05/03/11	Qualification and Specification Requirements for the Manufacturing of Precast/Prestress Concrete Bridge Members
23	09/28/12	Requirements for the Use of Warm Mix Asphalt (WMA) Technologies in Asphaltic Concrete
24	08/30/13	Requirements for the Approval of Mechanically Stabilized Earth (MSE) Wall Systems

February 27, 2009
(1 Page)

MATERIALS
POLICY AND PROCEDURE
DIRECTIVES MANUAL

INTRODUCTION

The Materials Policy and Procedure Directives Manual has been prepared for the purpose of establishing uniform policies regarding materials for construction projects.

Each Policy and Procedure Directive is given a number designation. Subsequent changes to individual Policy and Procedure Directives will be identified with a letter suffix. For example, the first revision of Policy and Procedure Directive No. 4 would be identified as PPD No. 4a, the second revision would be PPD No. 4b, etc.

All revisions to the Materials Policy and Procedure Directives Manual shall officially originate from ADOT Materials Group.

Revisions will be issued under a Materials Policy and Procedure Directives Manual Change Letter. All change letters issued will be numbered consecutively, beginning with No. 1.

Change letters will be signed by the Assistant State Engineer, Materials Group.

Revisions issued under each Materials Policy and Procedure Directives Manual Change Letter will be effective for projects with a bid opening date on or after the effective date of the corresponding change letter.

Materials Group will welcome any suggestions for the improvement of the Materials Policy and Procedure Directives Manual, as it is hoped and intended that manual users will participate its formulation and revision.

ARIZONA DEPARTMENT OF TRANSPORTATION * MATERIALS GROUP

1221 NORTH 21ST AVENUE PHOENIX, ARIZONA 85009-3740 PHONE (602) 712 - 7231

POLICY AND PROCEDURE DIRECTIVE

James P. Delton
Assistant State Engineer

TO: ALL MANUAL HOLDERS	PPD NO. 1
SUBJECT: SAMPLING, TESTING, AND ACCEPTANCE OF REINFORCING BARS	EFFECTIVE DATE: February 27, 2009

1. GENERAL

1.1 This Policy and Procedure Directive supersedes P.P.D. No. 92-2.

1.2 This Policy and Procedure Directive outlines the procedure to be followed for sampling, testing, and acceptance of reinforcing bars.

1.3 This Policy and Procedure Directive modifies the normal certification procedures. It shall be used in conjunction with the requirements of Subsection 106.05 of the Specifications.

2. PROCEDURES

2.1 Samples of reinforcing steel bars taken at the supplier's or fabricator's place of business shall be known as pre-shipment samples, while those samples obtained from stockpile or shipment at the project shall be known as project samples. A shipment should be considered any amount of reinforcement steel bars delivered to a project on any given day, of one transported load.

3. PRE-SHIPMENT SAMPLING FROM SUPPLIERS AND/OR FABRICATORS IN THE PHOENIX OR TUCSON AREAS

3.1 When a supplier or fabricator plans a shipment of reinforcing steel to an ADOT construction project, they should first contact Materials Group, Central Lab, Structural Materials Testing Section to obtain a laboratory number referenced to the project number. Normally the following working day, Structural Materials Testing Section or Regional Materials Laboratory personnel will randomly sample the pre-shipment or receive a pre-shipment sample from the supplier or fabricator at their place of business. For bar size #14, the sample shall be one piece forty-two (42) inches in length, selected at random for each shipment up to thirty (30) tons. For bar size #18, a sample shall be one piece forty-two (42) inches in length, selected at random for each shipment up to fifty (50) tons. For all other bar sizes the sample shall be one piece, seven (7) feet in length, selected at random for each shipment up to twenty (20) tons and one sample for each twenty (20) tons thereafter. Those samples will be submitted for each bar size, grade, heat number, and manufacturer in the shipment. All samples shall be submitted to Structural Materials Testing Section. The pre-shipment bars that are obtained from the supplier

or fabricator must be accompanied by a complete and accurate Certificate of Compliance. The information shown on the certificate must match the bar identification marks. If no Certificate of Compliance is available or the information shown on the certificate is incomplete or inaccurate, the bars should not be accepted for testing. The manufacturer will not be required to submit a Certificate of Analysis (Mill Test Reports).

3.2 When the supplier or fabricator makes a shipment to a project, they will furnish a completed Certificate of Compliance (a blank sample is shown in Attachment #1) stating that the material in the shipment is from the same stock as the pre-shipment sample covered by the laboratory number given to them earlier by the Structural Materials Testing Section. If the pre-shipment sample fails to comply with specification requirements, Structural Materials Testing Section will notify the project by telephone without delay at the completion of testing. In addition, the project shall verify the authenticity of the laboratory number and the reference to the testing of the pre-shipment sample bars, by contacting Structural Materials Testing Section.

3.3 All shipments will be subject to spot sampling upon arrival at the project. The project sample shall consist of one sample bar seven (7) feet in length, regardless of the number of bar sizes. This sample bar should be taken at random from each shipment to the project and submitted to Structural Materials Testing Section for testing. The placement of the reinforcing steel bars shall not be delayed while the project is awaiting test results. However, the concrete placement operation should not begin until satisfactory results of the project sample bar testing are obtained.

4. REINFORCING BARS NOT PRE-SHIPMENT SAMPLED

4.1 When the supplier or fabricator makes a shipment to a project from outside the Phoenix or Tucson areas, or not otherwise subjected to pre-shipment sampling, the shipment shall be accompanied by a Certification of Compliance conforming to the requirements of Subsection 106.05 of the Specifications. Before any reinforcing steel from a shipment is to be incorporated into the project work, a project sample shall be taken, tested, and approved. A project sample shall be taken as soon as practical upon arrival at the job site. A different project sample that is representative of each bar size, grade, heat number, and manufacturer from that shipment will be required. The sampling requirements described for pre-shipment sampling for the Phoenix or Tucson areas shall be used.

5. EPOXY COATED REINFORCING BARS

5.1 Epoxy coated reinforcing bars will be sampled and tested in the same manner as uncoated reinforcing bars with the following changes:

5.1.1 The coating thickness and flexibility of epoxy coated reinforcing bars will be tested by Structural Materials Testing Section.

5.1.2 The supplier or fabricator will be required to furnish a Certificate of Compliance, conforming to the requirements of Subsection 106.05 of the Specifications, for the

powdered epoxy resin which properly identifies the batch and/or lot number, material, quantity of batch, date of manufacture, name and address of the manufacturer, and a statement that the powdered epoxy resin is the same composition as the initial sample pre-qualified for use. The Certificate of Compliance shall also state that production bars and pre-qualification bars have been identically prepared and applied with epoxy powders.

5.1.3 The contractor shall furnish a Certificate of Compliance from the coating applicator, in accordance with the requirements of Subsection 106.05 with each shipment of coated steel. The Certificate of Compliance shall (1) verify that the coated items and coating material have been tested in accordance with the requirements of the specifications, (2) state the actual test results for each requirement, (3) state that the test results comply with the requirements, and (4) state that the entire lot is in a fully-cured condition.

6. INFORMATION

6.1 Portions of the January 1990 Concrete Reinforcing Steel Institute "Manual of Standard Practice" are reproduced, with permission, as Attachments #2 through #10 to this Policy and Procedure Directive.

6.1.1 Attachment #2 shows the bar size designation, area, weight, and diameter of ASTM standard reinforcing bars.

6.1.2 Attachments #3 through #5 show the specifications for reinforcing bars, including the significance of the bar markings.

6.1.3 Attachments #6 through #10 provide a listing of the U.S. manufacturers of concrete reinforcing bars with their respective bar markings.

James P. Delton, P.E.
Assistant State Engineer
Materials Group

Attachments (10)

CERTIFICATE OF COMPLIANCE

PROJECT: _____

SUPPLIER: _____

_____

_____

CONTRACTOR: _____

MATERIAL: _____

QUANTITY IN THIS SHIPMENT: _____

LOT NUMBER IDENTIFICATION: _____

APPLICABLE SPECIFICATION: _____

I certify that the material indicated above conforms to all requirements of the project specifications. It is from stock that has been sampled and issued laboratory number _____ by the Arizona Department of Transportation, Materials Group, Central Laboratory, Structural Materials Testing Section.

_____
Signature and Date

_____
Name

_____
Title

ASTM STANDARD REINFORCING BARS

BAR SIZE DESIGNATION	NOMINAL AREA SQ. INCHES	NOMINAL WEIGHT POUNDS PER FT.	NOMINAL DIAMETER INCHES
#3	0.11	0.376	0.375
#4	0.20	0.668	0.500
#5	0.31	1.043	0.625
#6	0.44	1.502	0.750
#7	0.60	2.044	0.875
#8	0.79	2.670	1.000
#9	1.00	3.400	1.128
#10	1.27	4.303	1.270
#11	1.56	5.313	1.410
#14	2.25	7.65	1.693
#18	4.00	13.60	2.257

Current ASTM Specifications cover bar sizes #14 and #18 in A615 Grades 60 and 75 and in A706 only.

CHAPTER 1

MATERIAL SPECIFICATIONS FOR REINFORCING BARS

The specifications for reinforcement published by the American Society for Testing and Materials (ASTM) are generally accepted for construction in the United States. When ASTM revises specifications, most authorities usually accept the latest ASTM specifications even when local codes or independent specifications have not had corresponding revisions incorporated. This lag between changes and the special requirements of some public agencies causes occasional variations.

From the materials listed in this Chapter, or in Chapter 2, the structural engineer should select that grade and type of reinforcement which, in his or her judgment, will best meet the specific design requirements.

Chapters 1 and 2 cover material specifications for reinforcing materials. See Chapter 4 for suggested reinforcement specifications, and see Chapters 5 and 6 for recommended industry practices for estimating and detailing reinforcing materials.

REINFORCING BARS

Specifications for billet-steel, rail-steel, axle-steel and low-alloy steel reinforcing bars are available from the American Society for Testing and Materials, 1916 Race Street, Philadelphia, Pennsylvania 19103.

The tables on page 1-2 summarize all pertinent mechanical, deformation, and chemical composition requirements for billet-, rail-, axle-, and low-alloy steel reinforcing bars. The first table also illustrates the grades and bar sizes available in accordance with the four ASTM specifications.

Rolling mill identification marks required by ASTM specifications are shown on page 1-3. The bar marks used by domestic mills known to be commercially producing rebars are illustrated in detail in Appendix A.

CRSI RECOMMENDATION – WELDING OF REINFORCING BARS

The "weldability" of steel established by its chemical analysis limits the applicable welding procedures and sets preheat requirements. Chemical analyses are not ordinarily meaningful for rail and axle bars. The chemical analysis (available upon request) for standard A 615 billet bars is incomplete for determining welding requirements under the "Structural Welding Code Reinforcing Steel" (AWS D1.4-79). Special complete analyses may be secured usually at an extra cost. It should be noted that all standard bar specifications, A 615, A 616, and A 617, specifically note that "The weldability of the steel is *not* part of this specification."

For these reasons, the CRSI recommendation for welding of reinforcing bars is:

"Reinforcing bars conforming to ASTM A 706, 'Low-Alloy Steel Deformed Bars for Concrete Reinforcement,' are recommended for use in all seismic-resistant reinforced concrete structures and wherever important or extensive welding is required. Before specifying A 706 reinforcement, however, local availability should be investigated. Most producers can make A 706 bars, but not in quantities less than one heat of steel for each bar size. (A heat of steel varies in different mills, but may be about 50 to 200 tons.) Thus, A 706 in lesser quantities of single bar sizes may not be immediately available from any single producer. Since the special qualities for seismic-resistant construction are required only for the flexural reinforcement in principal frame members, it will seldom be economical for a user to specify A 706 for small bars, #3, #4, #5, and #6, usually employed for shear or in thin slabs not part of the primary seismic-resistant frame, and which seldom require welding as they can be lap spliced."

SPIRAL REINFORCEMENT

1. STANDARD SIZES

Plain round bars, deformed bars, or wire for spirals are furnished in the following standard sizes and areas as prescribed in the "Simplified Practice Recommendation—Steel Spirals for Reinforced Concrete Columns" in Appendix B. Areas and weights are in accordance with the following table:

STANDARD SIZES

	Area (Sq. in.)	Weight (Lb. per ft.)
3/8" ø or #3	0.11	0.376
1/2" ø or #4	0.20	0.668
5/8" ø or #5	0.31	1.043

2. MATERIAL

Hot-rolled bars for spirals should conform to ASTM A 615, A 616, A 617, or to ASTM A 706, as specified.

Cold-drawn wire for spirals should conform to ASTM A 82 with a minimum yield strength of 70,000 psi.

Deformed wire for spirals should conform to ASTM A 496 with a minimum yield strength of 75,000 psi.

Unless otherwise specified, plain or deformed hot-rolled bars will be furnished.

MATERIAL SPECIFICATIONS FOR REINFORCING BARS (Cont.)

MECHANICAL REQUIREMENTS FOR STANDARD ASTM DEFORMED REINFORCING BARS

Type of Steel and ASTM Designation	Bar Nos. Range	Grade[1]	Minimum[2] Yield, psi	Minimum Tensile strength, psi	Minimum Percentage Elongation in 8 in.	Cold Bend test[3] Pin Diameter (*d* = nominal diameter of specimen)
Billet-Steel A 615	3-6	40	40,000	70,000	#3 . . . . . 11 #4, #5, #6 12	#3, #4, #5 . . . . . 3½*d* #6 . . . . . 5*d*
	3-11, 14, 18	60	60,000	90,000	#3, #4, #5, #6 . . . . . 9 #7, #8 . . . . . 8 #9, #10, #11, #14, #18 7	#3, #4, #5 . . . . . 3½*d* #6, #7, #8 . . . . . 5*d* #9, #10, #11 . . . . . 7*d* #14, #18 (90 deg) 9*d*
	11, 14 18	75	75,000	100,000	#11, #14, #18 6	#11 . . . . . 7*d* #14, #18 (90 deg) 9*d*
Rail-Steel A 616	3-11	50	50,000	80,000	#3, #7 . . . . . 6 #4, #5, #6 . . . . . 7 #8, #9, #10, #11 5	For Grades 50 and 60: #3, #4, #5 . . . . . 6*d* per S1[4] . . . . . 3½*d* #6, #7, and #8 . . . . . 6*d* per S1[4] . . . . . 5*d* #9, #10 . . . . . 8*d* per S1[4] . . . . . 7*d* #11 (90 deg) . . . . . 8*d* per S1[4] 7*d*
	3-11	60	60,000	90,000	#3, #4, #5, #6 . . . . . 6 #7 . . . . . 5 #8, #9, #10, #11 . . . . . 4½	
Axle-Steel A 617	3-11	40	40,000	70,000	#3, #7 . . . . . 11 #4, #5, #6 . . . . . 12 #8 . . . . . 10 #9 . . . . . 9 #10 . . . . . 8 #11 7	#3, #4, #5 . . . . . 3½*d* #6 through #11 . . . . . 5*d*
	3-11	60	60,000	90,000	#3, #4, #5, #6, #7 . . . . . 8 #8, #9, #10, #11 7	#3, #4, #5 . . . . . 3½*d* #6, #7, #8 . . . . . 5*d* #9, #10, #11 . . . . . 7*d*
Low-Alloy Steel A 706	3-11, 14, 18	60	60,000[5]	80,000[6]	#3, #4, #5, #6 . . . . . 14 #7, #8, #9, #10, #11 . . . . . 12 #14, #18 10	#3, #4, #5 . . . . . 3*d* #6, #7, #8 . . . . . 4*d* #9, #10, #11 . . . . . 6*d* #14, #18 . . . . . 8*d*

[1] Minimum yield designation.
[2] Yield point or yield strength. See ASTM specifications.
[3] Test bends 180° unless noted otherwise.
[4] Under supplementary requirements S1 of ASTM A 616 only. ACI 318 requires rail-steel bars (ASTM A 616) to meet Supplementary Requirement S1.
[5] Maximum yield strength 78,000 psi (ASTM A 706 only).
[6] Tensile strength shall not be less than 1.25 times the actual yield strength (ASTM A 706 only).

DEFORMATION REQUIREMENTS FOR STANDARD ASTM DEFORMED REINFORCING BARS

Size No.	Maximum Average Spacing	Minimum Average Height	Maximum[1] Gap
3	0.262″	0.015″	0.143″
4	0.350″	0.020″	0.191″
5	0.437″	0.028″	0.239″
6	0.525″	0.038″	0.286″
7	0.612″	0.044″	0.334″
8	0.700″	0.050″	0.383″
9	0.790″	0.056″	0.431″
10	0.889″	0.064″	0.487″
11	0.987″	0.071″	0.540″
14	1.185″	0.085″	0.658″
18	1.58″	0.102″	0.864″

[1]Chord of 12.5% of nominal perimeter.

CHEMICAL COMPOSITION REQUIREMENTS FOR STANDARD ASTM DEFORMED REINFORCING BARS

Type of Steel and ASTM Designation	Condition[1]	Element									
		Carbon (C)	Manganese (Mn)	Phosphorus (P)	Sulfur (S)	Silicon (Si)	Copper (Cu)	Nickel (Ni)	Chromium (Cr)	Molybdenum (Mo)	Vanadium (V)
Billet-Steel A 615	1	X	X	X	X						
	2			0.06%							
	3			0.075%							
Low-Alloy Steel A 706	1	X	X	X	X	X	X	X	X	X	X
	2	0.30%	1.50%	0.035%	0.045%	0.50%					
	3	0.33%	1.56%	0.043%	0.053%	0.55%					

[1] CONDITION DEFINITIONS: [1] Analysis required of these elements for each heat.
[2] Maximum allowable chemical content for each heat.
[3] Maximum allowable chemical content for finished bar.

CHAPTER 1

MATERIAL SPECIFICATIONS FOR REINFORCING BARS (Cont.)

IDENTIFICATION MARKS*—ASTM STANDARD REBARS

The ASTM specifications for billet-steel, rail-steel, axle-steel and low-alloy reinforcing bars (A 615, A 616, A 617 and A 706, respectively) require identification marks to be rolled into the surface of one side of the bar to denote the producer's mill designation, bar size, type of steel, and minimum yield designation. Grade 60 bars show these marks in the following order.

1st – Producing Mill (usually a letter)

2nd – Bar Size Number (#3 through #18)

3rd – Type of Steel: **S** for Billet (A 615)

I for Rail (A 616)

I R for Rail meeting Supplementary Requirements S1 (A 616)

A for Axle (A 617)

W for Low-Alloy (A 706)

4th – Minimum Yield Designation

Minimum yield designation is used for Grade 60 and Grade 75 bars only. Grade 60 bars can either have one (1) single longitudinal line (grade line) or the number 60 (grade mark). Grade 75 bars can either have two (2) grade lines or the grade mark 75.

A grade line is smaller and is located between the two main ribs which are on opposite sides of all bars made in the United States. A grade line must be continued through at least 5 deformation spaces, and it may be placed on the side of the bar opposite the bar marks. A grade mark is the 4th mark on the bar.

Grade 40 and 50 bars are required to have only the first three identification marks (no minimum yield designation).

VARIATIONS: Bar identification marks may also be oriented to read horizontally (at 90° to those illustrated).

Grade mark numbers may be placed within separate consecutive deformation spaces to read vertically or horizontally.

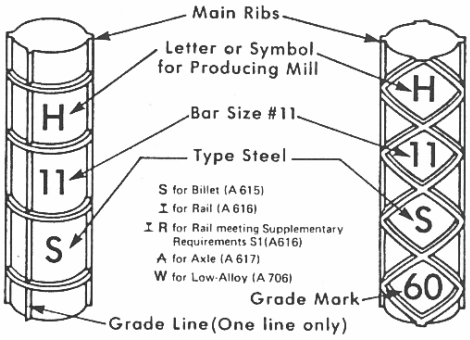

GRADE 60 AND A 706

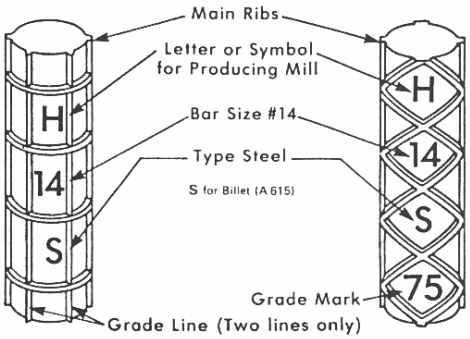

GRADE 75

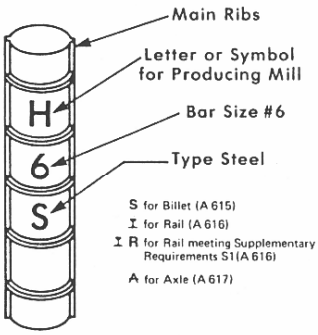

GRADE 40 AND 50

ACI BUILDING CODE – REQUIREMENTS FOR REINFORCING BARS

The current ACI Building Code requires billet-steel reinforcing to conform to the ASTM A 615 specification.

Rail-steel reinforcing bars must meet A 616 including supplementary requirement (S1). As shown in the mechanical requirements table on page 1-2, the supplementary requirement (S1) prescribes more-restrictive bend tests. S1 also requires that A 616 reinforcing bars furnished to these supplementary requirements must be designated for type of steel by the symbol "R", in addition to the rail symbol.

The ACI Code does not have special requirements for axle-steel (A 617) and low-alloy (A 706) reinforcing bars, nor take any exceptions to the ASTM specifications for these bars.

*See Appendix A for complete identification marks of concrete reinforcing bars produced by all U.S. manufacturers. The marks, listed alphabetically by producing mill, include the identification requirements of ASTM and the deformation pattern used by each mill.

APPENDIX A

U.S. MANUFACTURERS OF CONCRETE REINFORCING BARS

IDENTIFICATION OF U.S. REINFORCING BARS

ASTM and AASHTO Specifications require that all reinforcing bars be identified by permanent, mill imprinted markings. See page 1-3.

1 A.B. STEEL MILL, INC.

A

#3 and #4 bars only
Grade mark line used for #3

1 A.B. STEEL MILL, INC.

A

Bars #5 through #10 only

2 ARMCO INC.
(Midwestern Steel Division)

S

#3 and #4 bars only
Grade mark line on opposite side

3 ATLANTIC STEEL COMPANY

S

Coiled bars (#3 through #5 only)

3 ATLANTIC STEEL COMPANY

S

Straight bars (#3 through #11 only)

3 ATLANTIC STEEL COMPANY

MILL	BAR SIZES
Cartersville	#3 through #7 only
Atlanta	#8 through #11 only

4 AUBURN STEEL COMPANY, INC.

S

Bars #3 through #5 only

4 AUBURN STEEL COMPANY, INC.

S

Bars #6 through #11 only

5 BAYOU STEEL CORPORATION

S

Bars #4 through #6 only
Grade mark line on opposite side

6 BIRMINGHAM STEEL CORPORATION
(Barbary Coast Steel Corporation)

S

6 BIRMINGHAM STEEL CORPORATION
(Illinois Division)

S

Bars #4 through #11 only

6 BIRMINGHAM STEEL CORPORATION
(Mississippi Steel Division)

S

6 BIRMINGHAM STEEL CORPORATION
(Norfolk Steel Corporation)

S

Bars #4 through #11 only

6 BIRMINGHAM STEEL CORPORATION
(Salmon Bay Steel Division)

S

Bars #3 through #9 only

6 BIRMINGHAM STEEL CORPORATION
(Salmon Bay Steel Division)

S

Bars #10 through #18 only

6 BIRMINGHAM STEEL CORPORATION
(Southern United Steel Division)

S

Bars #5 through #11 only

7 BORDER STEEL MILLS, INC.

S

APPENDIX A (Cont.)

U.S. MANUFACTURERS OF CONCRETE REINFORCING BARS

IDENTIFICATION OF U.S. REINFORCING BARS

ASTM and AASHTO Specifications require that all reinforcing bars be identified by permanent, mill imprinted markings. See page 1-3.

8 CALUMET STEEL COMPANY

S

Bars #4 through #10 only

9 CASCADE STEEL ROLLING MILLS, INC.

S

10 CF&I STEEL CORPORATION

S

Bars #3 through #7 only

10 CF&I STEEL CORPORATION

S

#8 bar only

10 CF&I STEEL CORPORATION

S

Bars #9 through #11 only

11 CHAPARRAL STEEL COMPANY

S

Grade mark line on opposite side

12 CHICAGO HEIGHTS STEEL

I

Bars #4 through #8 only

13 COMMERCIAL STEEL CORPORATION

I

Bars #3 through #6 only

14 CONNECTICUT STEEL CORPORATION

S

Bars #3 through #11 only
Grade mark line on opposite side

15 FLORIDA STEEL CORPORATION
(Charlotte Steel Mill Division)

S

Bars #4 through #11 only

15 FLORIDA STEEL CORPORATION
(Jacksonville Steel Mill Division)

S

Bars #3 through #11 only

15 FLORIDA STEEL CORPORATION
(Knoxville Steel Mill Division)

S

Bars #3 through #11 only

15 FLORIDA STEEL CORPORATION
(Tampa Steel Mill Division)

S

Bars #4 through #11 only

15 FLORIDA STEEL CORPORATION
(West Tennessee Steel Mill Division)

S

Bars #4 through #18 only

16 FRANKLIN STEEL COMPANY

I

Bars #4 through #11 only

17 GEORGETOWN STEEL CORPORATION

N

Bars #3 through #5 only

18 HAWAIIAN WESTERN STEEL, LTD.

S

APPENDIX A (Cont.)

U.S. MANUFACTURERS OF CONCRETE REINFORCING BARS

IDENTIFICATION OF U.S. REINFORCING BARS

ASTM and AASHTO Specifications require that all reinforcing bars be identified by permanent, mill imprinted markings. See page 1-3.

19 INLAND STEEL COMPANY

S

20 LACLEDE STEEL COMPANY

S

Straight bars

20 LACLEDE STEEL COMPANY

S

Bars #3 and #4 only, coiled bars

21 LTV STEEL COMPANY

S

Bars #5 through #11 only

22 MARION STEEL COMPANY

S

Bars #4 through #11 only

23 NEW JERSEY STEEL CORPORATION

S

Bars #3 through #11 only

24 NORTH STAR STEEL COMPANY
(Beaumont Mill)

S

Bars #3 and #4 only

24 NORTH STAR STEEL COMPANY
Milton Mill

S 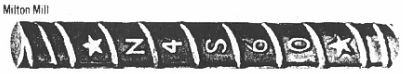

Bars #3 through #9 only

24 NORTH STAR STEEL COMPANY
Milton Mill

S

Bars #10 through #18 only

24 NORTH STAR STEEL COMPANY
(Monroe Mill)

S

Bars #4 through #18 only
Grade mark line on opposite side

24 NORTH STAR STEEL COMPANY
(St. Paul Mill)

S

Bars #4 through #11 only
Grade mark line on opposite side

24 NORTH STAR STEEL COMPANY
(St. Paul Mill)

S

#14 and #18 bars only
Grade mark line on opposite side

24 NORTH STAR STEEL COMPANY
(St. Paul Mill)

N

Bars #6 through #18 (Patented)–Longitudinal groove on one side only
Marking system not in conformance with ASTM Specifications

24 NORTH STAR STEEL COMPANY
(Wilton Mill)

S

Mill symbol "I" either appears as first mark (shown) or as last mark (under S)

25 NORTHWESTERN STEEL & WIRE CO.

S

Bars #3 through #10 only

26 NUCOR CORPORATION
(Nebraska Mill)

S

Bars #4 through #11 only

26 NUCOR CORPORATION
(Utah Mill)

S

Bars #4 through #18 only

APPENDIX A (Cont.)

U.S. MANUFACTURERS OF CONCRETE REINFORCING BARS

IDENTIFICATION OF U.S. REINFORCING BARS

ASTM and AASHTO Specifications require that all reinforcing bars be identified by permanent, mill imprinted markings. See page 1-3.

27 OWEN ELECTRIC STEEL CO. OF S.C.

S

Bars #3 through #14 only

28 ROANOKE ELECTRIC STEEL CORP.

S

Bars #3 through #11 only

29 SEATTLE STEEL, INC.

S

Bars #3 through #11 only

29 SEATTLE STEEL, INC.

S

#14 and #18 bars only

30 SHEFFIELD STEEL CORPORATION

S

Bars #3 through #14 only

31 SILVER, INC., W.

I

Bars #3 through #6 only

31 SILVER, INC., W.

I

Bars #3 through #6 only

31 SILVER, INC., W.

I

Bars #3 through #6 only
Grade mark line on opposite side

32 SMI STEEL - ARKANSAS

I

Bars #3 through #11 only

32 SMI STEEL - ARKANSAS

I

Bars #3 through #6 only

33 STRUCTURAL METALS, INC.

S

Bars #3 through #11 only

33 STRUCTURAL METALS, INC.

S

#14 and #18 bars only

34 TAMCO

S

34 TAMCO

S

Bars #4 and #5 only

34 TAMCO

S

Bars #6 through #18 only

35 THOMAS STEEL CORPORATION

S

36 USX CORPORATION

S

APPENDIX A (Cont.)

U.S. MANUFACTURERS OF CONCRETE REINFORCING BARS

NUMBERS REFER TO BAR MARK PHOTOS

1. A.B. STEEL MILL, INC.
   Cincinnati, Ohio
2. ARMCO, INC.
   Kansas City, Missouri
3. ATLANTIC STEEL COMPANY
   Atlanta, Georgia
4. AUBURN STEEL COMPANY
   Auburn, New York
5. BAYOU STEEL CORPORATION
   La Place, Louisiana
6. BIRMINGHAM STEEL CORPORATION
   Birmingham, Alabama
7. BORDER STEEL MILLS, INC.
   El Paso, Texas
8. CALUMET STEEL COMPANY
   Chicago Heights, Illinois
9. CASCADE STEEL ROLLING MILLS, INC.
   McMinnville, Oregon
10. CF & I STEEL CORPORATION
    Pueblo, Colorado
11. CHAPARRAL STEEL COMPANY
    Midlothian, Texas
12. CHICAGO HEIGHTS STEEL
    Chicago Heights, Illinois
13. COMMERCIAL STEEL CORPORATION
    Glassport, Pennsylvania
14. CONNECTICUT STEEL CORPORATION
    Wallingford, Connecticut
15. FLORIDA STEEL CORPORATION
    Tampa, Florida
16. FRANKLIN STEEL COMPANY
    Franklin, Pennsylvania
17. GEORGETOWN STEEL CORPORATION
    Georgetown, South Carolina
18. HAWAIIAN WESTERN STEEL, LTD.
    Ewa Beach, Hawaii
19. INLAND STEEL COMPANY
    Chicago, Illinois
20. LACLEDE STEEL COMPANY
    St. Louis, Missouri
21. LTV STEEL COMPANY
    Cleveland, Ohio
22. MARION STEEL COMPANY
    Marion, Ohio
23. NEW JERSEY STEEL CORPORATION
    Sayreville, New Jersey
24. NORTH STAR STEEL COMPANY
    Minneapolis, Minnesota
25. NORTHWESTERN STEEL & WIRE CO.
    Sterling, Illinois
26. NUCOR STEEL CORPORATION
    Norfolk, Nebraska
27. OWEN ELECTRIC STEEL COMPANY OF S.C.
    Cayce, South Carolina
28. ROANOKE ELECTRIC STEEL CORP.
    Roanoke, Virginia
29. SEATTLE STEEL, INC.
    Seattle, Washington
30. SHEFFIELD STEEL CORPORATION
    Sand Springs, Oklahoma
31. SILVER, INC., W.
    El Paso, Texas
32. SMI STEEL—ARKANSAS
    Magnolia, Arkansas
33. STRUCTURAL METALS, INC.
    Seguin, Texas
34. TAMCO
    Etiwanda, California
35. THOMAS STEEL CORPORATION
    Lemont, Illinois
36. USX CORPORATION
    Pittsburgh, Pennsylvania

ARIZONA DEPARTMENT OF TRANSPORTATION * MATERIALS GROUP

1221 NORTH 21ST AVENUE PHOENIX, ARIZONA 85009-3740 PHONE (602) 712 - 7231

POLICY AND PROCEDURE DIRECTIVE

James P. Delton
Assistant State Engineer

TO: ALL MANUAL HOLDERS	PPD NO. 2
SUBJECT: CERTIFICATION AND ACCEPTANCE OF CHEMICAL AND AIR-ENTRAINING ADMIXTURES FOR PORTLAND CEMENT CONCRETE	EFFECTIVE DATE: February 27, 2009

1. GENERAL

1.1 This Policy and Procedure Directive supersedes P.P.D. No. 96-1.

1.2 This Policy and Procedure Directive outlines the procedure to be followed for certification and acceptance of chemical and air entraining admixtures for portland cement concrete.

1.3 This Policy and Procedure Directive modifies the normal certification procedures. It shall be used in conjunction with the requirements of Subsection 106.05 of the Specifications.

2. REQUIREMENTS

2.1 To be acceptable for use by the Department, a chemical admixture or an air-entraining admixture must be listed on the ADOT Approved Products List.

2.2 The approval process shall include the manufacturer submitting satisfactory test results for the product, indicating that it meets the specification requirements of ASTM C 494 (for chemical admixtures) or ASTM C 260 (for air-entraining admixtures). Testing shall be conducted by an independent laboratory. The test results, accompanied by a Material Safety Data Sheet and the manufacturer's product data sheet, along with all required documentation, shall be submitted to the Arizona Transportation Research Center (ATRC) for approval/disapproval through the PRIDE program.

2.3 The submittal of a Certificate of Compliance from the manufacturer will be required in conjunction with having the product on the ADOT Approved Products List. The certificate shall clearly state the period of time in which all of the production of the particular product meets the appropriate specification and that formulation of the product has not changed during this period. This period of time shall be limited to twelve months prior to the date of signature on the certificate. This document shall be submitted to Materials Group, Structural Materials Testing Section, and retained for record.

3. PROCEDURES

3.1 The construction project or area laboratory shall verify that chemical admixtures and/or air-entraining admixtures shown on the concrete mix design also appear on the ADOT Approved Products List.

3.2 Sampling by the project or area laboratory and testing of the admixtures is not necessary. However, the Department reserves the right to sample and test for acceptance at any concrete batch plant without notice.

3.3 Obtaining a Certificate of Compliance by the project or area laboratory is not necessary.

3.4 The project or area laboratory shall physically verify at the batch plant that the admixtures described on the mix design are present and being used.

James P. Delton, P.E.
Assistant State Engineer
Materials Group

ARIZONA DEPARTMENT OF TRANSPORTATION * MATERIALS GROUP

1221 NORTH 21ST AVENUE PHOENIX, ARIZONA 85009-3740 PHONE (602) 712 - 7231

POLICY AND PROCEDURE DIRECTIVE

James P. Delton
Assistant State Engineer

TO: ALL MANUAL HOLDERS	PPD NO. 3a
SUBJECT: CURING COMPOUNDS	EFFECTIVE DATE: April 14, 2010

1. GENERAL

1.1 Section 1006-2.05 of the Specifications gives the requirements for liquid membrane forming concrete curing compounds.

1.2 All curing compounds, whether pre-approved with a green sticker (see Attachment #1) or not, are required to have a Certificate of Compliance submitted conforming to the requirements of Section 106.05 of the Specifications.

1.3 For pre-approved Type 2 (white pigmented) curing compounds, the pre-approval shall be effective for a maximum of six months from the production date.

1.4 For pre-approved Type 1-D (clear or translucent with fugitive dye) curing compounds, the pre-approval shall be effective for a maximum of twelve months from the production date.

1.5 Curing compounds shall be mixed thoroughly before samples are taken and prior to use on the project.

2. PROJECT RESPONSIBILITIES

2.1 When curing compound that has been pre-approved and tagged with a green sticker showing the project number, laboratory number, lot number, individual approving material, and date of approval arrives on the project, it is not required to do any further sampling. The project shall contact the appropriate laboratory (see Note below) for verification of the various information items and tests results.

Note: Generally Materials Group, Central Lab, Structural Materials Testing Section does the sampling, testing, and tagging of curing compounds for preapproval, and will be the lab which the project will contact for verification. However, in some cases the Regional Lab will sample the curing compound and send it to the Structural Materials Testing Section

for testing. The Structural Materials Testing Section will then notify the Regional lab of the test results and other pertinent information, and the Regional Lab will tag the curing compound. In these cases the project shall contact the Regional Lab for verification.

2.2 When curing compound arrives on the project which has not been preapproved, immediately sample it (approximately 1/2 gallon) and send it to the Structural Materials Testing Section for testing. Make sure the project number, manufacturers name, type of curing compound, and lot number are on the sample ticket.

2.3 Do not use any curing compound until approval has been received either by verification for pre-tested material or notification of acceptable test results for project sampled material.

3. REGION/DISTRICT RESPONSIBILITIES

3.1 Confer with the Structural Materials Testing Section, in maintaining current sampling procedures and receiving other guidelines as necessary.

4. STRUCTURAL MATERIALS TESTING SECTION RESPONSIBILITIES

4.1 Promptly notify Project Personnel of acceptability of samples submitted for testing.

4.2 Send copies of test results on pre-approved curing compounds to the project and the Regional Lab.

4.3 Assist Regional and Project Lab personnel in the sampling and evaluation of curing compounds.

James P. Delton, P.E.
Assistant State Engineer
Materials Group

Attachment (1)

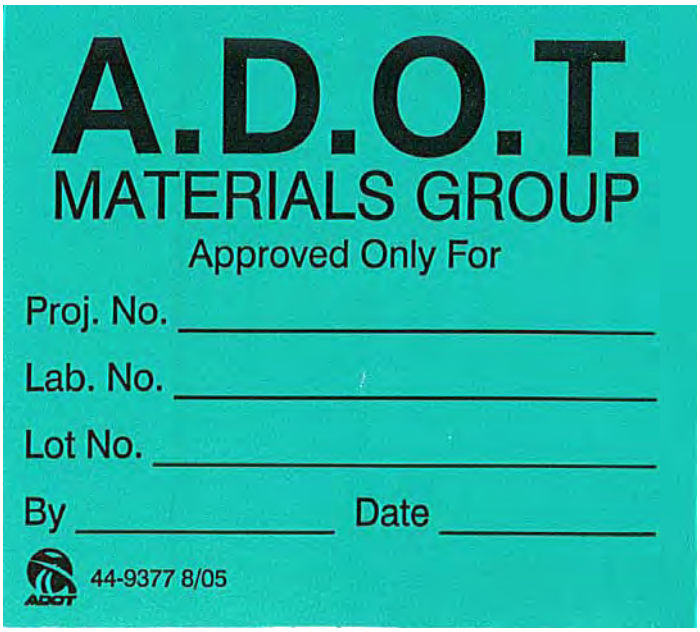

(Sticker shown above is larger than actual size.)

(Sticker has black lettering on a green background.)

ARIZONA DEPARTMENT OF TRANSPORTATION * MATERIALS GROUP

1221 NORTH 21ST AVENUE PHOENIX, ARIZONA 85009-3740 PHONE (602) 712 - 7231

POLICY AND PROCEDURE DIRECTIVE

James P. Delton
Assistant State Engineer

TO: ALL MANUAL HOLDERS	PPD NO. 4
SUBJECT: ASPHALTIC CONCRETE MIX DESIGN PROPOSALS AND SUBMITTALS	EFFECTIVE DATE: February 27, 2009

1. GENERAL

1.1 This Policy and Procedure Directive supersedes P.P.D. No. 96-6.

1.2 The information provided herein is given to assist those involved in the preparation and submittal of asphaltic concrete mix design proposals in accordance with the requirements of the Specifications.

1.3 The use of previously used mix designs is addressed in Section 6 of this Policy and Procedure Directive.

2. MATERIALS GROUP RESPONSIBILITIES

2.1 The Regional Materials Engineer, the Materials Group Bituminous Engineer, or the Materials Group Pavement Materials Testing Engineer will be responsible for the approval/disapproval of all asphaltic concrete mix designs.

3. REQUIREMENTS FOR MIX DESIGN LABORATORIES

3.1 To ensure that testing laboratories are capable of performing all asphaltic concrete mix design testing in conformance with the appropriate test procedures, laboratories wishing to perform asphaltic concrete mix design testing must have had an equipment and procedural inspection by Department personnel to demonstrate mix design testing. Any deficiencies found shall be corrected before mix designs will be accepted. Arrangements for laboratory inspections are made by contacting the Materials Group Quality Assurance Engineer.

3.2 Mix design laboratories must satisfy the requirements of the Arizona Department of Transportation "System for the Evaluation of Testing Laboratories".

4. REQUIREMENTS FOR MIX DESIGN ENGINEER

4.1 The Specifications require that asphaltic concrete mix designs be prepared under the direct supervision of a professional engineer, registered in the state of Arizona, experienced in the development of asphaltic concrete mix designs and mix design testing. The following items should help clarify the Department's policy relative to this subject.

1) Mix designs shall be sealed, signed, and dated by the engineer responsible for the mix design.

2) The policy does not preclude the use of consultant engineers, provided the consulting engineer performs direct supervision of the testing and mix design development, has evaluated the test equipment and procedures used in the laboratory and found them in compliance with all test method requirements, and is thoroughly knowledgeable in asphaltic concrete mix design preparation.

3) The use of the term "direct supervision" is interpreted to include the requirement that the mix design engineer be physically present on a routine basis while the mix design testing is being done and is in responsible charge of that work.

4) The preparation of mix designs by or under the supervision of a professional engineer who is not experienced in the development of asphaltic concrete mix designs and mix design testing is clearly prohibited. While experience by the mix design engineer in preparation of asphaltic concrete mix designs in accordance with Arizona Test Methods is preferred, experience in mix design preparation under comparable procedures may be substituted if the mix design engineer demonstrates that he/she is fully aware of the Arizona procedures and is prepared to conform to them.

5) Submission of a mix design which does not comply with test method requirements will be considered cause for rejection of that mix design. Should such a failure be of a significant or reoccurring nature, the Department may refuse to accept mix design proposals from that mix design engineer.

6) All laboratories that wish to submit asphaltic concrete mix designs must submit information to the Materials Group Bituminous Engineer, which indicates that the requirements described above have been met. This information must be provided prior to submitting asphaltic concrete mix designs. Information provided should include evidence of registration and experience in asphaltic concrete mix designs and mix design testing. Also included should be information which outlines how the requirement for providing direct supervision is to be satisfied.

5. REQUIRED MIX DESIGN SUMMARY ITEMS

5.1 Asphaltic concrete mix designs shall be submitted in a summary format that clearly indicates the required mix design information shown below.

1) Project Number and "TRACS" Number.

2) Prime Contractor.

3) Type of Mix Design. If the same mix design is developed to satisfy the requirements for more than one type of mix, for example 1/2" AC and 3/4" AC, the mix design shall clearly state this, and also show the specifications governing each individual type of mix.

4) Name and address of testing laboratory which developed the mix design.

5) Name, signature, and seal of the professional engineer who is responsible for the mix design. Mix designs shall be sealed, signed, and dated in accordance with the requirements of the Arizona State Board of Technical Registration. The date the mix design is signed by the engineer, as shown on his registration seal, will be the mix design date. Revised mix designs shall be submitted containing all information for the design. Revised mix designs shall be identified as such, and shall be sealed, signed, and dated by the responsible engineer.

6) Specific location(s) of original source(s) of mineral aggregate.

7) The gradation of the mineral aggregate in each stockpile.

8) Mix design mineral aggregate composite percentages and gradation, along with the appropriate mix design grading bands. The mix design composite gradation of the mineral aggregate shall be a washed gradation in accordance with the requirements of Arizona Test Method 201.

9) Source, type, percentage, and specific gravity of mineral admixture. The mix design shall be developed by, and so state, laboratory mixing procedures which simulate the method of adding mineral admixture which will be used in the production of the asphaltic concrete.

10) The percent of mineral admixture, by specification, is by weight of the mineral aggregate. The composite gradation of the combined mineral aggregate and mineral admixture, determined in accordance with Arizona Test Method 815, and the appropriate mix design grading bands are to be shown in the mix design proposal.

11) Supplier, refinery, grade (including any modifiers), and specific gravity of asphalt cement. For asphalt-rubber mix designs: the asphalt-rubber design, including asphalt

cement type and source; crumb rubber type, gradation, and source; percent crumb rubber by weight of asphalt cement; asphalt cement binder properties; asphalt-rubber binder properties; blending procedures; and reaction time.

12) When required, viscosity-temperature curve along with the laboratory mixing and compaction temperature ranges. For PG asphalt binders that have a maximum laboratory mixing temperature exceeding 325 °F or a maximum laboratory compaction temperature exceeding 300 °F, the laboratory mixing and compaction temperature ranges shall be specified in writing by the asphalt binder supplier. The actual laboratory mixing and compaction temperatures used shall be reported on the mix design.

13) Abrasion for each source of mineral aggregate used.

14) Sand equivalent of the combined mineral aggregate.

15) Fractured coarse aggregate particles of the mineral aggregate.

16) When required, uncompacted void content of the mineral aggregate.

17) When required, percent carbonates in aggregate.

18) When required, flat and elongated particles of the mineral aggregate.

19) Coarse and fine aggregate specific gravities, coarse and fine aggregate water absorption, combined coarse and fine aggregate specific gravities, and combined water absorption. In some cases, the calculation of combined water absorption has been done incorrectly. The proper method of calculating the combined water absorption is given in Arizona Test Method 251.

20) Asphalt (or asphalt-rubber) absorption, as required.

21) Recommended mix design asphalt content.

22) The following mix design characteristics at the recommended asphalt content shall be given: percent air voids; percent voids in mineral aggregate (VMA); bulk density; Marshall stability and flow (when applicable); when required, Immersion Compression results (wet strength, dry strength, and index of retained strength); and the calculated maximum density of bituminous mixture. When determining the maximum theoretical specific gravity of the bituminous mixture (Arizona Test Method 806), it shall be assured that the requirement for no more than 18 grams difference between the total weight of aggregate, mineral admixture, and binder before mixing and the total "weight of the samples in air" is complied with.

23) When required, the dust to binder ratio, calculated by dividing the mix design composite gradation target for the No. 200 sieve (including mineral admixture) by the effective asphalt content.

24) Any stipulations upon which the use of the mix design is contingent. (For example, minmum or maximum percentage of special materials such as washed or imported aggregates.)

5.2 The mix design shall be submitted to the Engineer under a cover letter signed by an authorized representative of the contractor.

6. PREVIOUSLY USED MIX DESIGNS

6.1 The contractor may propose the use of a mix design that has been developed for a previous project. The proposed mix design shall meet the requirements of the current project. The contractor shall provide evidence that the type and source of bituminous material, the type of mineral admixture, and the source and methods of producing mineral aggregate have not changed since the formulation of the previous mix design. The contractor shall also provide current test results for all specified characteristics of the mineral aggregate proposed for use. The Engineer will determine if the previously used mix design is suitable for the intended use and if the previous use of the mix design was satisfactory to the Department. The Engineer will either approve or disapprove the proposed mix design. Should the Engineer disapprove the use of the previously used mix design, the contractor shall prepare and submit a new mix design proposal in accordance with the requirements of these specifications.

6.2 A previously used mix design older than two years from the date it was formulated, sealed, signed, and dated shall not be allowed for use. Once approved for use on a project, a mix design may be used for the duration of the project.

7. ADDITIONAL MIX DESIGN REQUIREMENTS

7.1 In addition to the mix design summary, worksheets showing laboratory data and test results are also to be included in the mix design. The loading used in the preparation of immersion compression specimens must be reported as part of the test data.

7.2 If any tests shown in the mix design were performed by another testing laboratory, the mix design must clearly state the tests, where they were performed, and the mix design engineer under whose direction the testing was accomplished. The laboratory performing this mix design testing and the mix design engineer must meet the requirements of this Policy and Procedure Directive.

7.3 For asphaltic concrete produced under ADOT Specifications 406, 409, 416, or 417, representative samples of the mineral aggregate, mineral admixture, and asphalt cement

used in the mix design are submitted to the Engineer for calibration of the ignition furnace, and the determination of sand equivalent and fractured coarse aggregate particles. If required, the uncompacted void content shall also be determined.

7.4 For asphaltic concrete produced under ADOT Specification 415, representative samples of the mineral aggregate, mineral admixture, and asphalt-rubber used in the mix design are submitted to the Engineer for calibration of the ignition furnace, and the determination of sand equivalent, fractured coarse aggregate particles, and uncompacted void content.

7.5 Mix design proposals for asphaltic concrete produced under ADOT Specifications 406, 409, 415, 416, or 417 are submitted to the Engineer. The Engineer shall send a copy of the mix design to the Regional Materials Engineer. The Regional Materials Engineer, the Materials Group Bituminous Engineer, or the Materials Group Pavement Materials Testing Engineer shall review the mix design proposal for completeness and accuracy, and shall approve or disapprove the mix design proposal. The mix design must be approved by the Regional Materials Engineer, the Materials Group Bituminous Engineer, or the Materials Group Pavement Materials Testing Engineer prior to the start of asphaltic concrete production.

James P. Delton, P.E.
Assistant State Engineer
Materials Group

ARIZONA DEPARTMENT OF TRANSPORTATION * MATERIALS GROUP

1221 NORTH 21ST AVENUE PHOENIX, ARIZONA 85009-3740 PHONE (602) 712 - 7231

POLICY AND PROCEDURE DIRECTIVE

James P. Delton
Assistant State Engineer

TO: ALL MANUAL HOLDERS	PPD NO. 5a
SUBJECT: EVALUATION OF CONCRETE AGGREGATE SOURCES	EFFECTIVE DATE: April 14, 2010

1. GENERAL

1.1 This Policy and Procedure Directive outlines the procedure to be followed for the evaluation of concrete aggregate sources and their identification by the name of the source, the partial legal description, the latitude/longitude, and if appropriate, the source number assigned by the Materials Group Geotechnical Section or the Environmental and Enhancement Group.

1.2 Concrete aggregate sources that are subject to use by the Department are required to be tested initially, and thereafter at a minimum frequency of once every two years to determine suitability as sources of concrete aggregate.

2. SOURCE EVALUATION

2.1 The Regional Materials Engineer is responsible to assure that the appropriate sampling and testing of concrete aggregate sources in their Region is performed.

2.2 To reduce the impact due to the volume of testing, a uniform distribution of sample submittals from concrete aggregate sources within a Materials Group Region should be considered.

2.3 Sampling of fine and coarse aggregate shall be performed in accordance with Arizona Test Method 105.

2.3.1 For each sample, a Sample Tabulation Ticket shall be completed with all appropriate information. The remarks area must also be completed to contain the name of the source, the partial legal description, the latitude/longitude, and if appropriate, the source number assigned by the Materials Group Geotechnical Section or the Environmental and Enhancement Group. The latitude/longitude shall be based on the NAD83 geodetic datum, and shall be expressed in decimal degrees to at least five decimal places.

2.3.2 If sodium sulfate soundness (Section 2.6.2), or any of the tests listed in Section 2.7 are to be performed, it shall be so noted in the remarks area of the Sample Tabulation Ticket.

2.4 The sampling of concrete aggregate sources for testing as listed in Sections 2.6 and 2.7 shall be performed by ADOT personnel. For the mandatory testing specified in Section 2.6, a minimum of 55 lbs of fine aggregate and a minimum of 140 lbs of coarse aggregate shall be obtained. Typically, one 5-gallon bucket of fine aggregate and two 5-gallon buckets of coarse aggregate will be sufficient to meet these requirements. If the testing shown in Section 2.7.1 [Clay lumps and friable particles (AASHTO T 112)] or Section 2.7.2 [Lightweight particles, including coal and lignite (AASHTO T 113)] is required, the amount of coarse aggregate obtained shall be doubled.

2.5 Testing may be performed by either the Central Laboratory or a Regional Laboratory. If both laboratories are used to evaluate a single source, it must be clearly communicated as to what testing each laboratory is to perform. When any of the tests listed in Sections 2.6 and 2.7 are performed by a Regional Laboratory, the source location description (name of the source, partial legal description, latitude/longitude, and if appropriate, the source number assigned by the Materials Group Geotechnical Section or the Environmental and Enhancement Group) and the test results shall be submitted to the Materials Group Structural Materials Engineer.

2.6 The following mandatory tests will be performed:

2.6.1 Sieve analysis (Arizona Test Method 201) shall be determined on both the fine and coarse aggregate.

2.6.2 Sodium sulfate soundness (AASHTO T 104) shall be determined on both the fine and coarse samples when the aggregates are to be used in concrete placed above 4500 feet elevation.

2.6.3 Abrasion resistance (AASHTO T 96) shall be determined on the coarse aggregate.

2.6.4 Organic impurities (AASHTO T 21) shall be determined on the fine aggregate. (Based on the results of this test, it may be required to perform the Mortar Strength test, as described in Section 2.6.4.1.)

2.6.4.1 Mortar strength (AASHTO T 71, except Type II cement and graded sand conforming to the requirements of ASTM C 778 is to be used to determine the relative strength of the aggregate under test) shall be determined on the fine aggregate when results for AASHTO T 21 produce a color darker than the standard color.

2.7 The following tests will be performed, at the discretion of Materials Group:

2.7.1 Clay lumps and friable particles (AASHTO T 112) are determined on both the fine and coarse aggregate.

2.7.2 Lightweight particles, including coal and lignite, (AASHTO T 113, except the percent of lightweight particles shall be reported to the nearest 0.01%) are determined on both the fine and coarse aggregate.

2.7.3 Specific gravity and absorption (Arizona Test Method 210) are determined on the coarse aggregate.

2.7.4 Specific gravity and absorption (Arizona Test Method 211) are determined on the fine aggregate.

2.7.5 Sand equivalent (AASHTO T 176) shall be determined on the fine aggregate.

2.7.6 Fractured coarse aggregate particles (Arizona Test Method 212) shall be determined on the coarse aggregate.

3. SOURCE IDENTIFICATION BY PARTIAL LEGAL DESCRIPTION

3.1 A partial legal description of the source must be provided by identifying the location of the source as described in Sections 3.5 and 3.6 below. The General (County) Highway Maps or other suitable maps are helpful in identifying the location of the source. Suitable maps are typically available at the District Administration Offices, the Regional Laboratories, or the Materials Group Geotechnical Section.

3.2 There are two principal meridians in Arizona: the Gila and Salt River Meridian, and the Navajo Meridian. The Gila and Salt River Meridian governs most of the state, while the Navajo Meridian governs only a very small area in the northeast part of Arizona. In Utah, the Salt Lake Meridian is the principal meridian that identifies the area in Southern Utah.

3.3 Examples illustrating the relationship of Township, Range, Section, and Section Subdivisions are given in the ADOT Construction Manual. For convenience, these items are included as Attachment #1 and Attachment #2, respectively, in this Policy and Procedure Directive.

3.4 Locate the position of the source as close as possible on the appropriate General Highway Map or other suitable map of the area. Determine the meridian (baseline) which governs the area and identify it by one of the following: (G) for the Gila and Salt River Meridian, (N) for the Navajo Meridian, and (S) for the Salt Lake Meridian. Determine the Township number (north or south), Range number (east or west), Section number, and the appropriate subdivisions of the Section.

3.5 Shown in the table below are the possible correct entries for the corresponding partial legal description items for the source location:

Partial Legal Description Item	Possible Correct Entries
Meridian (Baseline)	G, N, or S
Township	T N or T S
Range	R E or R W
Section	1 to 36
Quarter	NE, NW, SE, or SW
Half	N, S, E, or W

3.6 An example of the entries that should be shown in the remarks area of the sample tabulation ticket is as follows: "N, SW, NE, 4, T24S, R13W, G". This entry would be read as "the north half of the southwest quarter of the northeast quarter of Section 4, Township 24 South, Range 13 West, of the Gila and Salt River Meridian".

3.7 The concrete source location description and all test results from the evaluation of the concrete aggregate source will be maintained by the Materials Group.

James P. Delton, P.E.
Assistant State Engineer
Materials Group

Attachments (2)

1301 TOWNSHIP SUBDIVISION

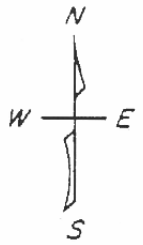

R.103 W. R.102 W. R.102 W. R.101 W.

T. 43 N.	36 RANGE LINE	31	32	33	34	35	36 RANGE LINE	31 TOWNSHIP LINE
T. 42 N.	1	6	5	4	3	2	1	6
	12	7	8	9	10	11	12	7
	13	18	17	16	15	14	13	18
	24	19	20	21	22	23	24	19
	25	30	29	28	27	26	25	30
T. 42 N.	36	31	32	33	34	35	36	31 TOWNSHIP LINE
T. 41 N.	1	6	5	4	3	2	1	6

1302 SECTION SUBDIVISION

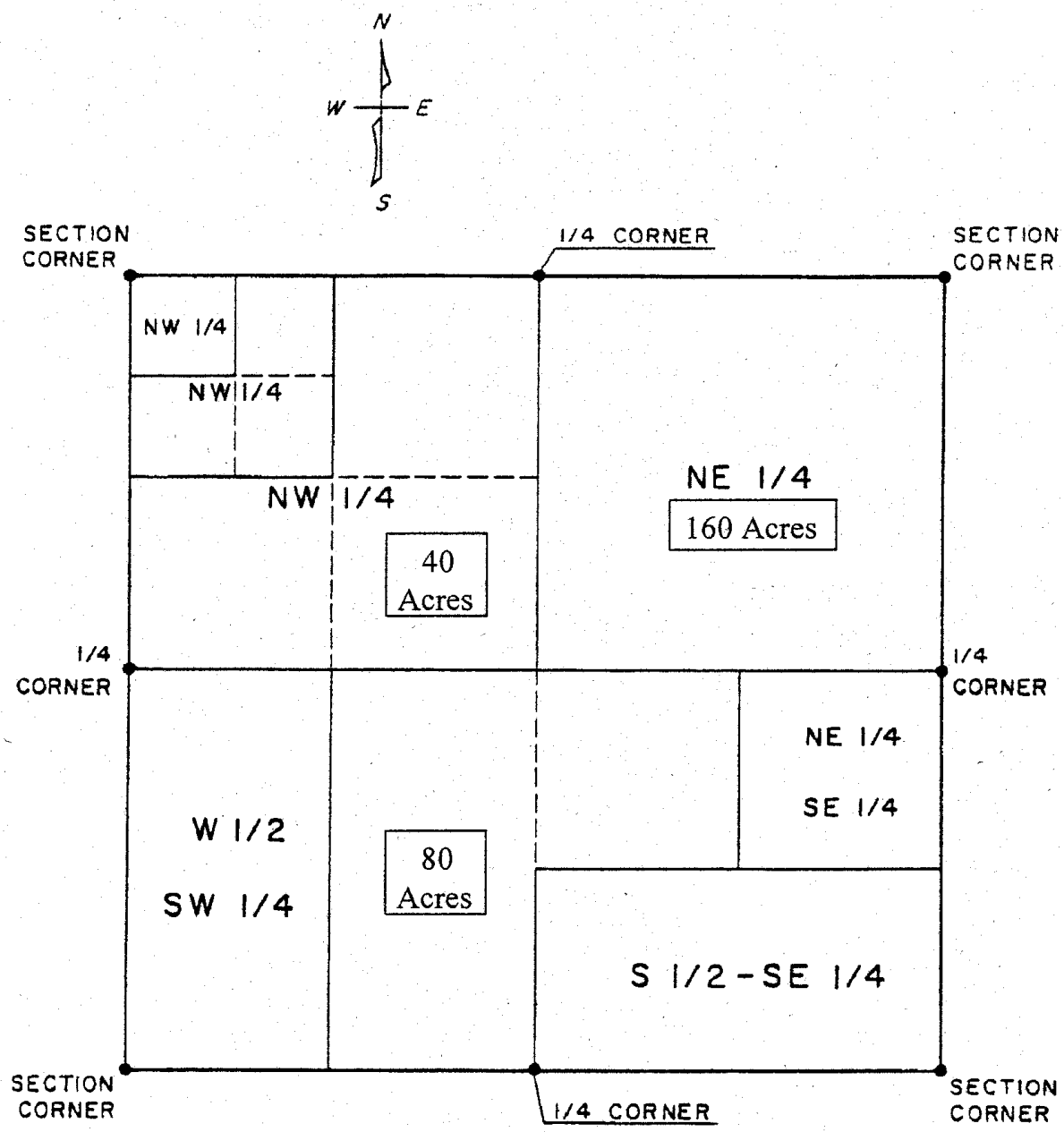

640 Acres per Section (Square Mile)

ARIZONA DEPARTMENT OF TRANSPORTATION * MATERIALS GROUP

1221 NORTH 21ST AVENUE PHOENIX, ARIZONA 85009-3740 PHONE (602) 712 - 7231

POLICY AND PROCEDURE DIRECTIVE

James P. Delton
Assistant State Engineer

TO: ALL MANUAL HOLDERS	PPD NO. 6
SUBJECT: PROVISIONAL SEAL COAT	EFFECTIVE DATE: February 27, 2009

1. GENERAL

1.1 This Policy and Procedure Directive supersedes P.P.D. No. 96-9.

1.2 This Policy and Procedure Directive gives general guidelines for the use of a provisional seal coat. The Engineer has the option to apply a provisional seal coat to any new bituminous pavement surface at the locations and the times as he/she directs. The Engineer may use a provisional seal coat on any lift of new bituminous pavement that is likely to be subject to precipitation or exposed during winter shutdown prior to the placement of any subsequent lifts of bituminous material. Although provisional seal coats are not contract items, they should be considered for use under the conditions described herein.

2. REASONS FOR USE

2.1 In warm, sunny weather, the pneumatic action of traffic loads during and soon after construction will densify and seal the new pavement surface, reducing the air voids and making the pavement surface less permeable. However, if the pavement is subjected to moisture before the surface has a chance to densify and seal through pneumatic traffic action and warm dry weather, the pavement could strip and/or ravel. Application of a provisional seal coat to the new pavement surface before it is subjected to moisture will help alleviate this problem. Also, if a new asphaltic concrete pavement will go through a winter before receiving its final finishing course, a provisional seal coat may be needed to prevent water intrusion and damage to the pavement.

3. WHEN TO USE

3.1 In order for a provisional seal coat to be effective, the material should seal the surface. Good well-informed judgment should be exercised when deciding to direct the placement of a provisional seal. The following sources are valuable in obtaining the necessary information:

3.1.1 The percent asphalt content from acceptance tests on the new asphaltic concrete.

3.1.2 The percent air voids in the pavement (field voids), which can be obtained from field density and Rice tests.

3.1.3 If there is time, test strips approximately 3 feet by 30 feet can be placed using various application rates and types of bituminous material.

3.2 The following guidelines, based on field voids, can be utilized in forming a judgment as to when a provisional seal coat is needed for surfaces exposed for extended periods of inclement weather.

VOID LEVELS	ACTION
Field Voids < 6.0%.	Do not apply.
Field Voids 6.0% - 10.0%	Engineer's judgment
Field Voids > 10.0%	Apply

3.3 The Engineer should utilize a provisional seal when he/she deems it necessary to preserve the new asphaltic concrete from the adverse effects of moisture. It may be necessary to use a provisional seal frequently during rainy seasons; occasionally as required by weather conditions and traffic; once to protect the pavement during winter shutdown or to protect the final pavement surface; or, not at all. The Engineer should evaluate all conditions and information when deciding if a provisional seal is needed.

4. BITUMINOUS MATERIALS

4.1 The bituminous materials which may be used for a provisional seal are: emulsified asphalt, emulsified asphalt (special type), and emulsified recycling agent (ERA). Bituminous materials must meet the requirements of Section 1005 of the Specifications. If ERA is utilized, it shall be diluted one part water to one part ERA.

4.2 When selecting the type of bituminous material to use, the following may be helpful:

EMULSIFIED OR EMULSIFIED (SPECIAL) ASPHALTS

POSITIVE ASPECTS

1) Will not soften the new asphaltic concrete significantly.

2) Helps seal the surface of the new asphaltic concrete and prevent water intrusion.

3) In most cases, a tack coat will not be needed where an emulsified asphalt provisional seal coat was applied.

4) May be more available when needed on short notice due to weather or construction conditions, especially if it is being used for Tack Coat.

5) Can be effective in special cases or problems such as rocky or coarse pavement surface or very high air voids in the mix caused by low asphalt content and/or poor compaction when it is not desirable to take other corrective action.

NEGATIVE ASPECTS

1) Can be worn off by traffic in wet weather.

2) May not break and adhere to the asphaltic concrete surface well under cold and/or wet weather conditions.

3) Can cause a slick, shiny surface.

4) Can migrate and fill air voids in the lower portion of a lift of asphaltic concrete placed over it, especially if applied in excessive amount.

5) Can cause a water trap in the top portion of the new asphaltic concrete by making a very thin impervious seal on top which prevents any water that gets into the air voids below from escaping.

EMULSIFIED RECYCLING AGENTS

POSITIVE ASPECTS

1) Will penetrate, fill air voids, and soften the top portion of the new asphaltic concrete (from 1/8 to 1/4 inches) to produce a dense surface if pneumatic traffic is available before moisture is encountered, which will help prevent water intrusion.

2) Can be applied more successfully under cold and/or wet conditions and will penetrate the surface of the new asphaltic concrete better and will not be washed off by water and traffic as easily.

3) In some cases, a tack coat will not be needed where an emulsified recycling agent provisional seal coat was applied; however, this determination must be made on an individual basis.

4) ERA-25 can be effective in special cases or problems such as a rocky or coarse pavement surface or a very high air void content in the asphaltic concrete caused by low asphalt content and/or poor compaction when it is not desirable to take orher corrective action.

NEGATIVE ASPECTS

1) Can cause a slick, shiny surface and instability in the portion of the asphaltic concrete it penetrates.

2) Needs pneumatic compaction to perform well.

3) Will fill air voids in the top portion of the asphaltic concrete it is applied to.

4) Not available on short notice in some cases.

5) When used in excessive amounts or where conditions are wrong, it can increase or cause bleeding or instability.

4.3 The table below shows approximate application rates. The Engineer should direct the application rate he/she determines to be most beneficial to the new asphaltic concrete, according to type and dilution.

TYPE OF BITUMINOUS MATERIAL	APPROXIMATE APPLICATION RATE (gal./sq. yd.)
Emulsified Asphalt (Special Type)	0.08
Emulsified Asphalt (Other than Special Type)	0.06
Emulsified Recycling Agent (diluted with one part water to to one part ERA)	0.08

4.4 The Engineer may direct that a sand blotter be applied in one or more applications for a total application of approximately 2 pounds per square yard.

5. SUMMARY

5.1 The provisional seal coat is to be utilized only when and where it is needed. If used where it is not needed, the provisional seal coat can be harmful to the pavement. If used properly it can help prevent surface stripping and raveling in new pavement surfaces. A great deal of attention must be paid to the properties of the new asphaltic concrete pavement and the weather conditions in deciding if a provisional seal coat is needed, and if needed, what type and what application rate will do the best job. Good well-informed judgment must be used when working with provisional seal coats. The decisions necessary will need to be made at the project and district level for each project and its condition; however, Materials Group personnel will lend any assistance as requested.

5.2 Payment to contractors for provisional seal coat will be made by change order.

James P. Delton, P.E.
Assistant State Engineer
Materials Group

ARIZONA DEPARTMENT OF TRANSPORTATION * MATERIALS GROUP

1221 NORTH 21ST AVENUE PHOENIX, ARIZONA 85009-3740 PHONE (602) 712 - 7231

POLICY AND PROCEDURE DIRECTIVE

James P. Delton
Assistant State Engineer

TO: ALL MANUAL HOLDERS	PPD NO. 7
SUBJECT: INSPECTION OF CONCRETE BATCH PLANTS AND CONCRETE MIXER TRUCKS	EFFECTIVE DATE: February 27, 2009

1. GENERAL

1.1 This Policy and Procedure Directive supersedes P.P.D. No. 96-10.

1.2 Regional Lab and/or District Construction Lab personnel will conduct periodic inspections of the various concrete batch plants and batching operations and will perform annual inspections of concrete mixer trucks.

1.3 As an option to ADOT inspection of the concrete batch plants and batching operations, the supplier may submit, to the Regional Materials Engineer, certification of their concrete production facilities from the National Ready Mixed Concrete Association (NRMCA) and/or Arizona Rock Products Association (ARPA). Attachment #1 is an illustration of the NRMCA/ARPA certificate which is issued for concrete production facilities.

1.4 Attachment #2 shows an example ADOT inspection sheet for concrete mixer trucks. As an option to the annual ADOT inspection of concrete mixer trucks, the trucks may be inspected in accordance with the requirements of the National Ready Mixed Concrete Association (NRMCA) and/or Arizona Rock Products Association (ARPA). Upon satisfactory completion of inspection, an inspection sticker shall be applied in a clearly visible location to the inside of the driver's side door of the truck. Attachment #3 gives an illustration of inspection stickers used by ADOT and ARPA. Concrete mixers trucks that do not have a valid ADOT or ARPA sticker indicating the date of inspection will not be allowed to supply concrete to ADOT projects.

1.5 Since inspections by the NRMCA/ARPA are currently done every two years, ADOT may perform inspections at anytime between NRMCA/ARPA inspections if deemed necessary.

James P. Delton, P.E.
Assistant State Engineer
Materials Group

Attachments (3)

ARIZONA ROCK PRODUCTS ASSOCIATION

Certificate of Conformance for Concrete Production Facilities

IT IS HEREBY CERTIFIED THAT

has been inspected by the undersigned registered professional engineer for conformance with requirements of the "Check List for Ready Mixed Concrete Production Facilities." As of the inspection date, the facilities met requirements for production by

_____
Signature of P.E.

_____
Inspection Date

_____
Certificate Expiration Date

ARIZONA ROCK PRODUCTS ASSOCIATION

_____
Date

_____
Executive Vice President

This company will maintain these facilities in compliance with the Check List requirements and will correct promptly any deficiencies which develop.

_____
Signature and Title of Company's Principal Executive

NOTICE: The Check List indicates only that plant facilities are satisfactory for the production of concrete when properly operated. Conformance of the concrete itself with specification requirements must be verified by usual inspection methods in accordance with sales agreements.

MIXER TRUCK INSPECTION SHEET

TRUCK #	OWNER	BRAND	LEGIBLE MANF. PLATE		GROSS VOLUME	MIXING VOLUME	MIXING SPEED	AGTAT SPEED	SIGHT GLASS		WORKING COUNTER		FIN COND.		HARD CONC.		OVERALL COND.		APPROV	
			YES	NO	CU/FT	CU/YD			YES	NO	YES	NO	G	B	Y	N	CHU	VAL	YES	NO

REMARKS

DATE TRUCKS INSPECTED _____

INSPECTORS SIGNATURE _____

EXAMPLE

ADOT CONCRETE MIXER TRUCK
INSPECTION STICKER

(Sticker shown above is larger than actual size.)

(Sticker has silver lettering on a blue background)

ARPA CONCRETE MIXER TRUCK
INSPECTION STICKER

(Sticker shown above is larger than actual size.)

(Sticker has silver lettering on a red background)

ARIZONA DEPARTMENT OF TRANSPORTATION * MATERIALS GROUP

1221 NORTH 21ST AVENUE PHOENIX, ARIZONA 85009-3740 PHONE (602) 712 - 7231

POLICY AND PROCEDURE DIRECTIVE

James P. Delton
Assistant State Engineer

TO: ALL MANUAL HOLDERS	PPD NO. 8
SUBJECT: SAMPLING, TESTING, AND ACCEPTANCE OF EMULSIFIED BITUMINOUS MATERIALS	EFFECTIVE DATE: February 27, 2009

1. GENERAL

1.1 This Policy and Procedure Directive supersedes P.P.D. No. 96-11.

1.2 This policy and procedure directive outlines the procedures to be followed for sampling, testing, and acceptance of emulsified asphalts and emulsified recycling agents. It establishes procedures to be used in the approval and shipment of all emulsions used on ADOT projects.

1.3 This Policy and Procedure Directive modifies the normal certification procedures. It shall be used in conjunction with the requirements of Subsection 106.05 of the Specifications.

2. PROCEDURES

2.1 Emulsions may be accepted for use on an ADOT project using either of two acceptance procedures. The first procedure involves testing and preapproval of individual tanks or batches of undiluted emulsion by ADOT. The second procedure involves acceptance on the basis of Certificate of Analysis for individual tanks or batches of undiluted emulsion by an approved testing laboratory. Both procedures include certain specified responsibilities and conditions that must be fulfilled by the supplier and ADOT personnel. Out-of-State suppliers shall conform to the provisions of this policy and procedure directive unless otherwise directed by the Materials Engineer or the Pavement Materials Testing Engineer.

Supplier Location	Responsible ADOT Lab
Phoenix Area	Central Laboratory
Tucson Area	Tucson Regional Laboratory
Flagstaff Area	Flagstaff Regional Laboratory
Fredonia Area	Flagstaff Regional Laboratory
Out-of-State	Central Laboratory

2.2 ACCEPTANCE THROUGH PREAPPROVAL

2.2.1 This is the most commonly used procedure for acceptance of emulsions. The supplier elects to have their tanks or batches of material preapproved by the responsible ADOT lab prior to shipment. Tank or batch samples shall be taken by the supplier and witnessed by ADOT personnel. Sampling shall conform to the requirements of Arizona Test Method 103. If an emulsion is not used promptly, it shall be resampled at 30 day intervals.

(a) ADOT Testing Laboratory Responsibilities

(1) The responsible ADOT lab shall sample and test emulsions from suppliers.

(2) When the responsible ADOT lab receives a request for sampling and testing of an emulsion it shall respond in a timely manner. In general, testing of an emulsion shall be completed within 24 hours of receipt of a sample.

(3) After testing is completed, the supplier will be notified as to the acceptance or rejection of the emulsion. If the material is approved for use it shall be assigned an ADOT lab test number and the tank or batch number, quantity of material approved, and expiration date for this material shall be recorded.

(4) If an emulsion fails, the supplier may elect to have the material resampled and retested by ADOT personnel. If the material fails on retesting, it will not be tested further until the manufacturer submits test reports from a laboratory approved by the Materials Engineer which indicate the material is acceptable.

(5) The responsible ADOT testing laboratory will keep all necessary documentation in their offices on approved and disapproved tanks or batches of emulsion. They shall also keep copies of all Certificates of Compliance and maintain an accounting of the quantities of material shipped for each approved lab test number. Upon request from project personnel, the responsible lab will forward copies of test results of all materials incorporated on an ADOT project.

(b) Supplier's Responsibilities

(1) Upon notification of the approval of a tank or batch of emulsion and an assigned lab test number, the supplier shall submit to the responsible lab a Certificate of Compliance (a blank sample is shown in attachment #1) for the approved material which contains the following information:

a) Supplier's name and address.
b) Material type.
c) Tank or batch number.

d) Total quantity certified in tank or batch gallons.
e) Date certificate expires.
f) Statement that the material complies in all respects with the specific requirements of the cited specifications.
g) Responsible ADOT lab and the assigned ADOT lab test number.
h) Name, title, and signature/date of person(s) having legal authority to bind supplier of material.
i) This Certificate of Compliance shall be submitted to the responsible lab in a timely manner. If a certificate is not on file with the responsible lab, the Department may elect to disapprove the use of said material on an ADOT project.

(2) Each shipment (delivery unit) of an emulsion made to the project shall be accompanied by two copies of the Certificate of Compliance. In addition to the requirements listed above, these certificates shall include the following information:

a) ADOT project number.
b) Name of general (prime) contractor.
c) Quantity of material in shipment gallons.
d) Total quantity of material shipped from the certified tank or batch gallons.

(c) ADOT Project Personnel Responsibilities

(1) Two copies of the Certificate of Compliance shall accompany each shipment (delivery unit) of emulsion supplied to the project. The ADOT inspector shall receive and inspect them for accuracy and completeness.

(2) The project shall call the responsible ADOT lab and receive verification of the lab test number and acceptability of material before use. The project may also request a copy of the test results from the responsible ADOT lab at this time.

(3) One copy of the Certificate of Compliance shall be sent to the responsible ADOT lab in a timely manner.

(4) Sampling on the project shall consist of a set of two nearly full half-gallon plastic containers per delivery unit. A minimum of one gallon of the material being sampled shall be drawn and discarded prior to taking the test sample. Samples shall be taken by the contractor and witnessed by ADOT personnel. If the emulsion has been diluted, the project should indicate the rate of dilution on the sample ticket. One sample shall be tested for percent residue by either the project or Regional Lab. The remaining sample shall be held at the project lab for backup testing.

2.3 ACCEPTANCE THROUGH CERTIFICATE OF ANALYSIS

2.3.1 An alternative procedure for acceptance of emulsions is through a Certificate of Analysis. With the approval of the Materials Group, the supplier may elect to sample and test their own material and submit a Certificate of Analysis to the project. The Materials Group's approval of this acceptance method is contingent upon the supplier fulfilling certain requirements as specified below. The Materials Group reserves the right to revoke its approval should the supplier fail to comply with these requirements.

(a) Supplier's Responsibilities

(1) The supplier or its designated lab must be fully equipped and qualified to test emulsions for all specified properties. The testing laboratory must meet the requirements of the "ADOT System for the Evaluation of Testing Laboratories" for the testing of emulsified asphalts.

(2) The supplier must submit a written quality control and inventory control plan for approval to the Materials Group which outlines the procedure the supplier will follow to ensure that acceptable material is produced and supplied to the Department.

(3) All tanks or batches of material used on ADOT projects shall be fully tested by the supplier's designated testing lab and meet all properties specified for the material. The maximum amount of material which may be certified under any single Certificate of Analysis shall be 50,000 gallons. The material may not be used after 30 days from the date of test completion unless it has been retested and recertified.

(4) Upon completion of testing of a tank or batch of emulsion, the supplier shall submit to the responsible ADOT lab a Certificate of Analysis (a blank sample is shown in attachment #2) for the material which contains the following information:

a) Supplier's name and address.
b) Material type.
c) Tank or batch number.
d) Total quantity certified in tank or batch gallons.
e) Date certificate expires.
f) Statement that the material complies in all respects with the specific requirements of the cited specifications.
g) All required test information.
h) Name, title and signature/date of person(s) having legal authority to bind supplier of material.
i) This Certificate of Analysis shall be submitted to the responsible lab in a timely manner.

(5) Each shipment (delivery unit) of an emulsion made to the project shall be accompanied by two copies of the Certificate of Analysis. In addition to the requirements listed above, these certificates shall include the following information:

a) ADOT project number.
b) Name of general (prime) contractor.
c) Quantity of material in shipment gallons.
d) Total quantity of material shipped from the certified tank or batch gallons.

(b) ADOT Project Personnel Responsibilities

(1) Two copies of the Certificate of Analysis shall accompany each shipment (delivery unit) of emulsion supplied to the project. The ADOT inspector shall receive and inspect them for accuracy and completeness.

(2) The project shall call the responsible ADOT lab and receive verification that the supplier has been approved to use the "Certificate of Analysis Acceptance Program".

(3) One copy of the Certificate of Analysis shall be sent to the responsible ADOT lab in a timely manner.

(4) Sampling on the project shall consist of a set of three nearly full half-gallon plastic containers per delivery unit. A minimum of one gallon of the material being sampled shall be drawn and discarded prior to taking the test sample. Samples shall be taken by the contractor and witnessed by ADOT personnel. If the emulsion has been diluted, the project shall indicate the rate of dilution on the sample ticket. One sample shall be tested for percent residue by either the project or Regional Lab. One sample shall be sent to the responsible ADOT lab for quality assurance testing. The remaining sample shall be held at the project lab for backup testing.

(c) ADOT Testing Lab Responsibilities

(1) The responsible ADOT lab shall test the quality assurance sample on a random basis. A minimum of 20% of all samples received will be tested for compliance to specifications.

(2) Should conditions warrant, the responsible lab may test undiluted samples from the supplier's tank or batch in lieu of testing samples from the project.

(3) The supplier, Materials Group Central Lab, and Regional Lab will be notified of out-of-specification test results or any significant variation from the supplier's test results on the same material. The intent of the quality assurance testing is to verify that the supplier's quality control program is adequate to ensure that the specified material is provided, not to

determine the acceptability of the material. The material is accepted by the Department on basis of the Certificate of Analysis. Should the responsible ADOT lab question the validity of the supplier's quality control program through quality assurance testing or reports from project offices of substandard material, the matter shall be referred to the Materials Engineer for his/her determination.

(4) The responsible ADOT lab will keep all necessary documentation on quality assurance testing of emulsions. They shall also keep copies of all Certificates of Analysis and maintain an accounting of the quantity of each shipment for comparison to the amount of emulsion certified.

3. SUMMARY

3.1 This Policy and Procedure Directive outlines the procedures to be followed for sampling, testing, and acceptance of emulsified bituminous materials. The important thing to remember is that no emulsified bituminous material shall be used until either a copy of the Certificate of Compliance with an approved lab test number, or a Certificate of Analysis is furnished. The initial certificate will be on file at the responsible ADOT lab. If any questions arise concerning these procedures, contact the Pavement Materials Testing Engineer.

James P. Delton, P.E.
Assistant State Engineer
Materials Group

Attachments (2)

CERTIFICATE OF COMPLIANCE

PROJECT #: _____ CONTRACTOR: _____

SUPPLIER NAME AND ADDRESS: _____

_____

_____

MATERIAL: _____ TANK OR BATCH NUMBER: _____

TOTAL QUANTITY CERTIFIED IN THIS TANK OR BATCH: _____gallons

DATE CERTIFICATE EXPIRES: _____

QUANTITY IN THIS SHIPMENT: _____gallons

TOTAL QUANTITY SHIPPED TO DATE
FROM CERTIFIED TANK OR BATCH: _____gallons

I certify that the material indicated above conforms to all applicable requirements of Section 1005 of the Arizona Department of Transportation Standard Specifications, including requirements in the contract special provisions, and is from stock that has been sampled and approved by the responsible Arizona Department of Transportation laboratory (_____) under Laboratory Test Number (_____).

_____
Signature and Date

_____
Name

_____
Title

CERTIFICATE OF ANALYSIS

PROJECT #: _____ CONTRACTOR: _____

SUPPLIER NAME AND ADDRESS: _____

_____

_____

MATERIAL: _____ TANK OR BATCH NUMBER: _____

TOTAL QUANTITY CERTIFIED IN THIS TANK OR BATCH: _____gallons

DATE CERTIFICATE EXPIRES: _____

QUANTITY IN THIS SHIPMENT: _____gallons

TOTAL QUANTITY SHIPPED TO DATE
FROM CERTIFIED TANK OR BATCH: _____gallons

I certify that the material indicated above conforms to all applicable requirements of Section 1005 of the Arizona Standard Specifications, including requirements in the contract special provisions, as represented by the attached test results.

_____
Signature and Date

_____
Name

_____
Title

ARIZONA DEPARTMENT OF TRANSPORTATION * MATERIALS GROUP

1221 NORTH 21ST AVENUE PHOENIX, ARIZONA 85009-3740 PHONE (602) 712 - 7231

POLICY AND PROCEDURE DIRECTIVE

James P. Delton
Assistant State Engineer

TO: ALL MANUAL HOLDERS	PPD NO. 9
SUBJECT: GUIDELINES FOR INSPECTION AND ACCEPTANCE OF TIMBER GUARDRAIL POSTS AND BLOCKS	EFFECTIVE DATE: February 27, 2009

1. GENERAL

1.1 This Policy and Procedure Directive supersedes P.P.D. No. 02-01.

1.2 The purpose of this directive is to provide guidelines in the inspection and acceptance of timber guardrail posts and blocks, which ensure a product with proper preservation treatment, adequate strength, and good appearance.

1.3 Solid timber posts and blocks may be either rough sawn (unsurfaced) or S4S (surfaced four sides) lumber.

1.4 Glued laminated timber shall be constructed according to the requirements of ANSI/AITC (American National Standards Institute/American Institute of Timber Construction). The manufacturing plant for glued laminated timber shall be certified and licensed by AITC. The manufacturer of glue laminated timber posts shall brand the tension face of the post in an area which will be above the ground line and below the bottom of the block. Laminated posts shall be installed with the tension face of the post facing the roadway.

2. APPLICABLE DOCUMENTS

2.1 ADOT Standard Specifications, Section 1012
2.2 American Wood Preservers Association (AWPA)
2.3 Western Wood Products Association (WWPA)
2.4 AASHTO M 133, and M 168
2.5 ASTM D 2559
2.6 American National Standards Institute (ANSI)
2.7 American Institute of Timber Construction (AITC) 113
2.8 ANSI/AITC A 190.1
2.9 International Conference of Building Officials, Evaluation Service (ICBO ES)

3. CLASSIFICATION

3.1 Solid Timber Posts and Blocks:

3.1.1 Solid timber, rough sawn shall be graded in accordance with WWPA Grading Rules, Section 80.00 for Post and Timbers, No. 1 or better.

3.1.2 Solid timber, S4S shall be graded in accordance with WWPA Grading Rules, Section 80.00 for Post and Timbers, No. 1 or better.

3.2 Glue Laminated Timber Posts and Blocks:

3.2.1 Lumber used for glue laminated timber guard rail posts and blocks shall conform to WWPA Grading Rules, Section 62.00, Structural Joists and Planks, No. 1 or better S4S lumber.

3.2.2 Adhesive used to bond laminated wood products shall be a two-component system that complies with ASTM D 2559 and has passed the ICBO ES, Acceptance Criteria for Exterior Sandwich Panel Adhesives (AC05).

3.2.3 Laminated posts and blocks shall be glued together in a face-to-face glue joining, conforming to the requirements of AITC standards.

3.3 The required posts and blocks sizes shown in the contract documents shall be understood to be nominal dimensions. Allowable tolerances are shown in Subsection 5.5, Field Inspection.

4. WOOD PRESERVATION TREATMENT & FABRICATION

4.1 Drilling or fabrication should be done where possible before preservation treatment process. In event of a mechanical injury or field cutting, field treatment should be in accordance with AWPA Standard M2.

4.2 The treatment process, including seasoning shall be in accordance with the requirements of AASHTO M 133, and AWPA C1, C2, and C28.

4.3 The inspection at the wood preservation plant for posts and blocks shall conform to the requirements of AWPA M2.

4.4 The Materials Central Laboratory or the Regional Materials Laboratory nearest to the treatment plant may conduct the inspections at wood preservation plants or fabrication facilities within the state. For wood preservation plants or fabrication facilities outside the state, an approved consulting inspection service may be engaged.

4.5 A quality check on the certification procedure for the treatment of posts and blocks, a spot check type of inspection of the wood preservation plant facilities, will be periodically performed. This will include observing the conditioning process, checking the residual moisture before treatment, checking sampling and testing preservative agents, and checking assay procedures.

5. FIELD INSPECTION

5.1 The responsibility for acceptance of the posts and blocks will be that of the Engineer on the Project. Certification by the wood preservation plant will not substitute for the inspection for "Grade of Lumber".

5.2 A copy of the certification for preservation treatment and stress grade, together with the treatment assay sheet is to accompany each shipment of posts and blocks.

5.3 The contractor shall submit to the Engineer a Certificate of Compliance conforming to the requirements of the ADOT Standard Specifications Subsection 106.05. The certificate shall be furnished by the post and block supplier and shall also include the following information: (a) Identification of the qualified inspection and testing agency, (b) the species or species group of lumber as well as the grade, and (c) identification of the recognized standard to be used as an acceptance basis for this product.

5.4 Unloading, handling, and job site storage procedures:

5.4.1 Cable slings or chokers should not be used to handle post and block materials unless adequate blocking is provided between the cable and the wood member. Protection cleats or blocking shall applied at pick-up points to protect corners. A level storage area is required to avoid warping. Wood members shall be supported with blocking so spaced as to provide uniform and adequate support. Stored wood members shall have the top and all of the sides covered with a moisture resistant covering.

5.5 Allowable dimensional tolerances for posts and blocks:

5.5.1 Dimensional tolerances for solid timber rough sawn posts and blocks shall be plus or minus 1/16 inch in thickness and width; and plus or minus 1/8 inch in length.

5.5.2 Dimensional tolerances for solid timber (S4S) posts and blocks shall be plus or minus 1/2 inch in thickness and width; and plus or minus 1/8 inch in length.

5.5.3 The standard dimensions for glue laminated posts and blocks (S4S) with a nominal dimension of 6 inches x 8 inches shall be finished to the dimensions of 5-1/2 inches x 7-1/2 inches, according to AITC 113. Dimensional tolerances for glue laminated lumber posts and blocks shall be plus or minus 1/16 inch in thickness and width; and plus or minus 1/8 inch in length.

5.6 The following are guidelines for inspection of appearance and physical characteristics for grade. Definitions, characteristics, and the maximum allowable values are listed below for solid timber and glue laminated posts and blocks. See WWPA Section 80.00 for additional information for solid timber posts and blocks. See WWPA Section 62.00 for additional information for lumber used in glue laminated posts and blocks.

5.6.1 **Grain** – *The fibers in wood and their direction, size, arrangement, or quality.* A medium grain is required, which means an average of 4 or more annual rings per inch measured on a line perpendicular to the rings. See Attachment #1 and WWPA Section 170.00 for additional information.

Slope of grain is the deviation of the wood fiber from a line parallel to the edges of the piece. A maximum deviation of 1 in 10 is allowable. See Attachment #2, WWPA Section 230.00, and WWPA Section 712.00 for additional information.

5.6.2 **Sapwood** – *The outer layers of growth between the bark and the heartwood which contain the sap.* For further explanation see WWPA Section 738.00.

5.6.3 **Heartwood** – *The inner core of the tree trunk comprising the annual rings containing nonliving elements.* In some species, heartwood has a prominent color different from the sapwood. For further explanation see WWPA Section 714.00.

5.6.4 **Splits** – *A separation of the wood through the piece to the opposite surface or to an adjoining surface due to the tearing apart of the wood cells.* A split which extends into the piece on a plane parallel to the bolthole shall not be accepted. See Attachment #1.

For solid timber guard rail posts and blocks, the length of a split shall not exceed the width of the piece. Splits equal in length to the width of the piece, or equivalent to the total length of end checks, are permissible. See Attachments #1 and #2.

For lumber used for glue laminated posts and blocks, splits equal in length to the width of the piece are permissible. For further explanation see WWPA Section 742.00.

5.6.5 **Checks** – *A separation of the wood normally occurring across or through the rings of annual growth and usually as a result of seasoning.* Checks are measured as the penetration perpendicular to the widest face. Where two or more checks appear on the same face, only the deepest one is measured. Where two checks are directly opposite each other, the sum of their depths are taken.

For solid timber posts and blocks, checks are allowed to be a maximum of 1/2 the thickness of the post or block for single checks, or for checks opposite each other the sum of their depths is allowed to be a maximum of 1/2 the thickness of the post or block. See Attachment #1.

Checks in glue laminated timber guard rail posts and blocks may appear as openings parallel to the grain on the sides of the members, (See Attachments #1, #2, and #3). Surface seasoning checks are not limited. Checks which are located outside the shear critical zone (See Attachment #4) and which run in the direction of the length of the post are permitted to be a maximum of 3/16 inch in width and have a depth of not greater than 1/3 of the width of the laminated member. Allowable checks in the shear critical zone are determined by the equations shown in Attachment #4 [("d"$_{allowable}$ = 0.1W) and ("l"$_{allowable}$ = 0.9W), but "l"$_{allowable}$ shall not be greater than 6 inches]. The length (l) of side checks is not restricted. Through checks at ends are limited as for splits, see Attachment #1.

5.6.5 **Holes** – *Holes may either extend partially or wholly through the piece. An alternate designation for holes, which extend only partially through the piece, is surface pits.* Limitations shown below do not include holes drilled for hardware.

For solid timber guard rail posts and blocks, holes shall be limited to pin hole sizes. A pinhole is defined as not being over 1/16 inch in diameter.

Holes in lumber for glue laminated posts and blocks from any cause shall be limited to a maximum of 1-1/4 inches, and are further limited to one hole of a maximum of 1-1/4 inches, or equivalent smaller holes, for each 3 linear feet. For further explanation see WWPA Section 716.00.

5.6.6 **Skips** – *Skips are areas on a piece that failed to surface clean.*

For solid timber guard rail posts and blocks, occasional skips up to 1/8 inch in depth and two feet in length are allowable.

Hit-and-miss skips in lumber for glue laminated guard rail posts and blocks are allowed in a maximum of 10% of the pieces. Hit-and-miss skips are defined as skips which are a series of skips not over 1/16 of an inch deep with surfaced areas between.

5.6.7 **Wane** – *Bark or lack of wood from any cause, except eased edges, on the edge or corner of a piece of lumber.*

For solid timber guard rail posts and blocks, wane which is 1/4, or equivalent, of any face is allowed.

For lumber used in glue laminated guard rail posts and blocks, the allowable wane is 1/4, or equivalent, of the full length of the thickness face and 1/4, or equivalent, of the full length of the width face, provided that wane does not exceed 1/2 the thickness or 1/3 the width for up to 1/4 the length. For further explanation see WWPA Section 750.00.

5.6.8 **Shake** – *A lengthwise separation of the wood, which occurs between or through the rings of annual growth.*

For solid timber guard rail posts and blocks, shake of up to 1/3 the thickness is allowed, see Attachment #1.

For lumber used in glue laminated guard rail posts and blocks, through shakes at ends are limited as for splits. Surface shakes up to two feet in length are allowed, see Attachments #1, #2, and #3. For further explanation see WWPA Section 740.00.

5.6.9 **Knots** – *A portion of a branch or limb that has become incorporated in a piece of lumber.* Knots, which are sound and tight, and well spaced, are permitted. A sound knot contains no decay. A tight knot is so fixed by growth, shape or position that it retains its place in the piece.

For solid timber guard rail posts and blocks, the knot size limitation on a nominal 6-inch face is 1-7/8 inches, while on an 8-inch face the knot size is limited to 2-1/2 inches. See Attachment #1.

For lumber used in glue laminated guard rail posts and blocks, knots at the edge of the wide face for a nominal width face of 6 inches are limited to1-1/2 inches. Knots at the centerline of the wide face for a nominal width face of 6 inches are limited to 2-1/4 inches.

5.7 Measurement of Charactertistics

5.7.1 Grain, checks, holes, skips, wane, knots, and shake may be measured with a tape measure or similar device subdivided to at least 1/16 of an inch. Grain and shake are measured on the ends of the posts and blocks. Checks are most often found on the ends, but may also occur on the sides or faces. Splits and checks are measured for an average depth, or penetration, into the piece. A thin metal spatula or similar blade at least six inches in length may be used for this determination. The blade should be inserted firmly, but not forced into each split or check.

James P. Delton, P.E.
Assistant State Engineer
Materials Group

Attachments (4)

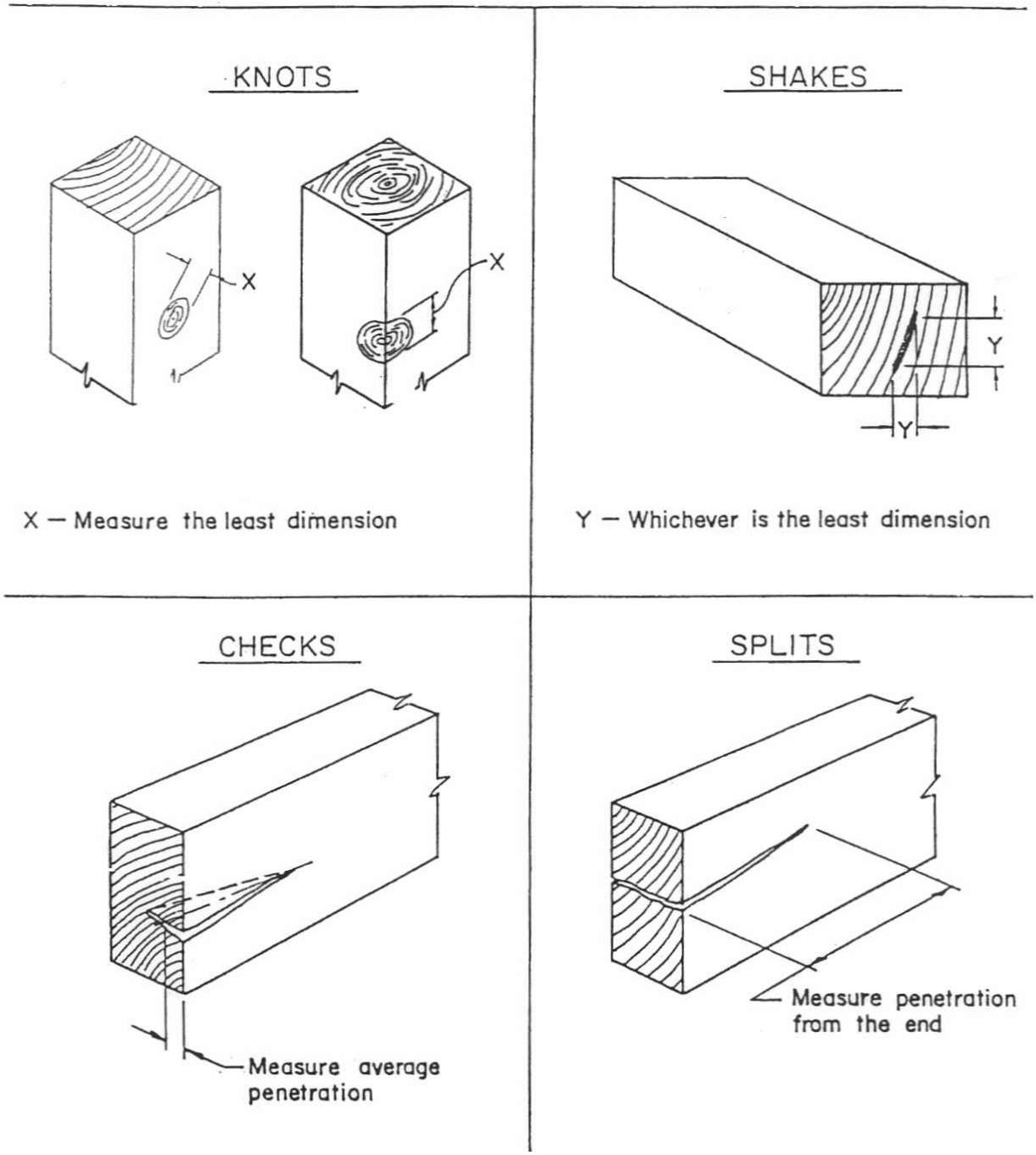
KNOTS
X
X
X — Measure the least dimension
SHAKES
Y
Y
Y — Whichever is the least dimension
CHECKS
Measure average penetration
SPLITS
Measure penetration from the end

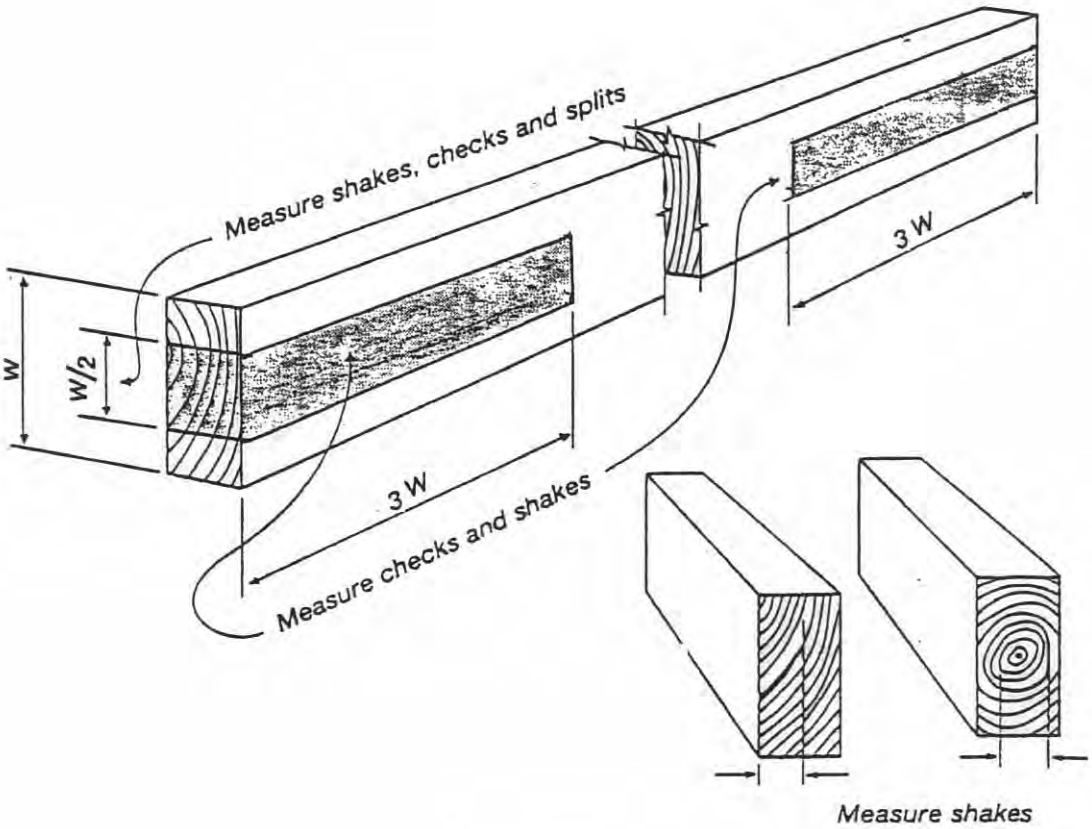
Measure shakes, checks and splits
W
W/2
3 W
3 W
Measure checks and shakes
Measure shakes

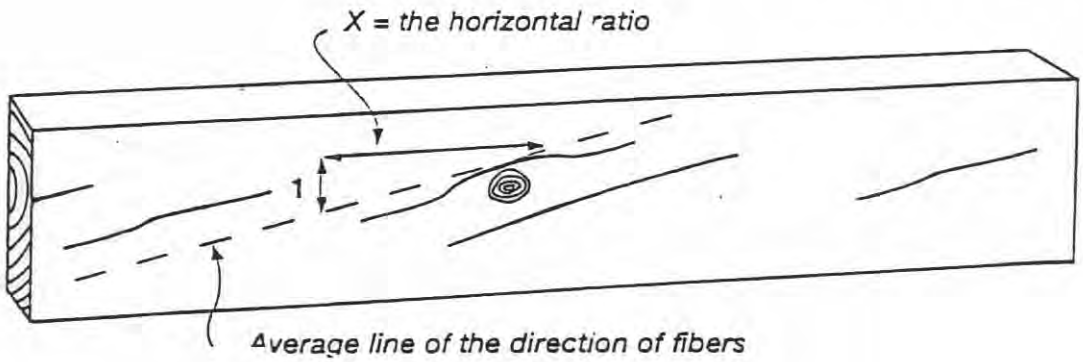
X = the horizontal ratio
1
Average line of the direction of fibers

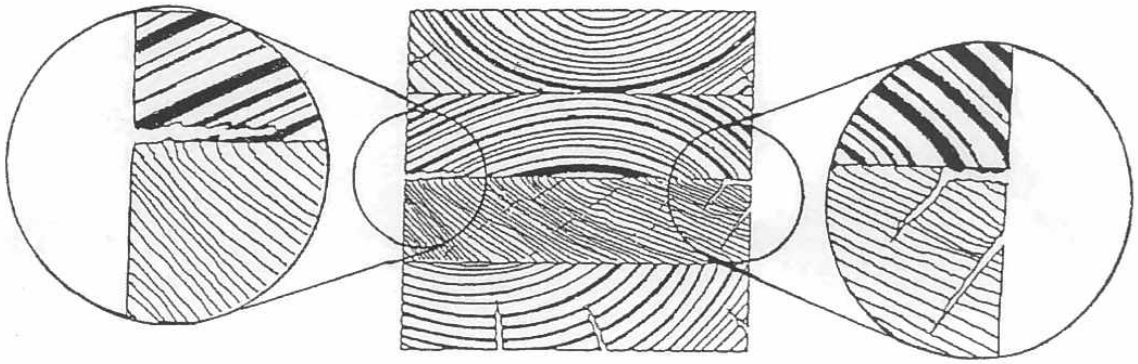

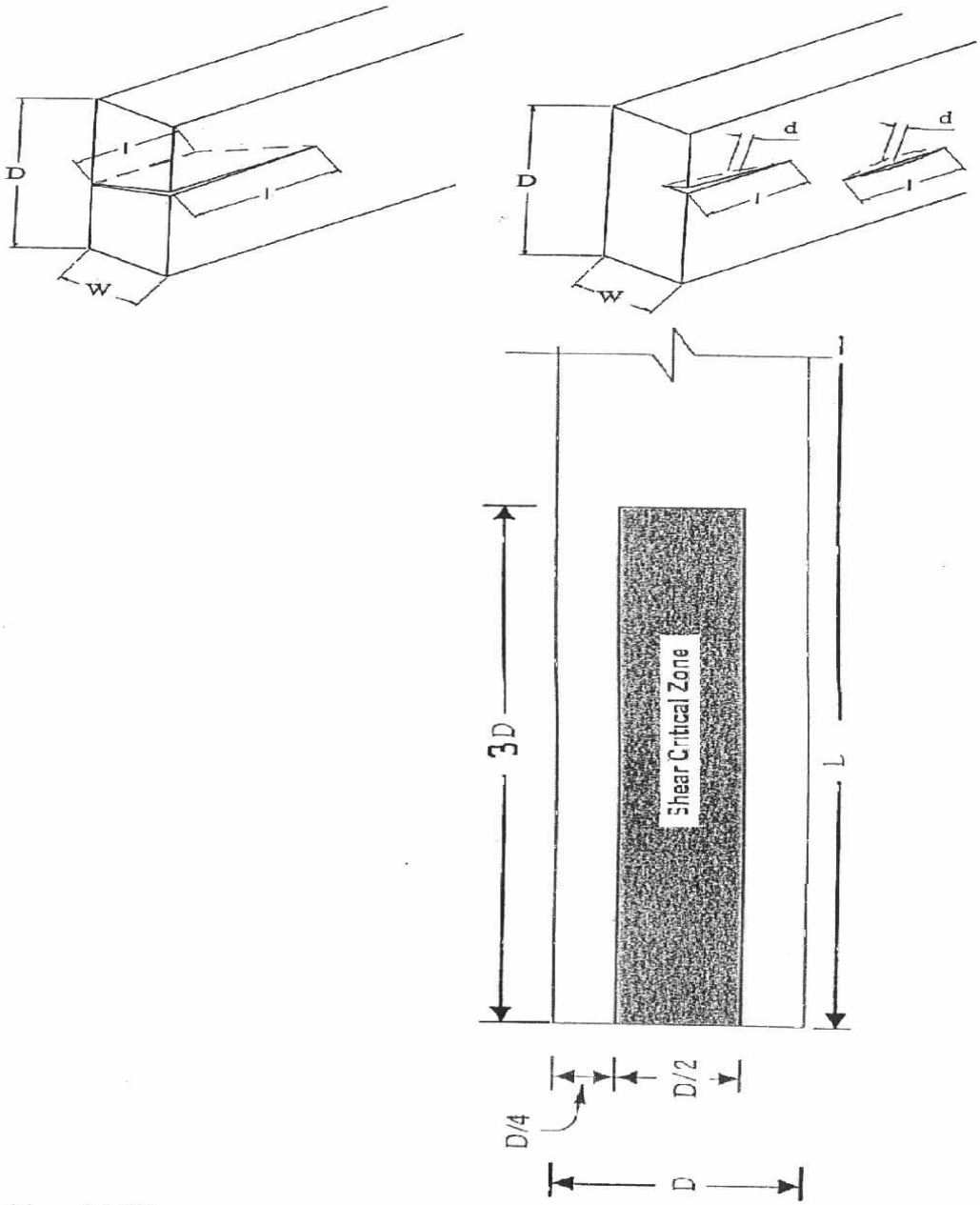

"d" allowable = 0.1 W
"l" allowable = 0.9W
L = length of the post above the surface

ARIZONA DEPARTMENT OF TRANSPORTATION * MATERIALS GROUP

1221 NORTH 21ST AVENUE PHOENIX, ARIZONA 85009-3740 PHONE (602) 712 - 7231

POLICY AND PROCEDURE DIRECTIVE

James P. Delton
Assistant State Engineer

TO: ALL MANUAL HOLDERS	PPD NO. 10
SUBJECT: END PRODUCT ASPHALTIC CONCRETE ACCEPTANCE TESTING – PROCEDURE FOR DETERMINATION OF STATISTICAL OUTLIERS	EFFECTIVE DATE: February 27, 2009

1. GENERAL

1.1 This Policy and Procedure Directive supersedes P.P.D. No. 04-1.

1.2 This procedure deals with the problem of outlying observations in sample test results and how to test the statistical significance of them. This procedure is adopted from ASTM E 178 *Dealing with Outlying Observations*. This procedure is intended to be used with end product type asphaltic concrete specifications such as 406, 416, and 417. Either ADOT or the Contractor may raise the question of whether an observation is an outlier.

1.3 An outlying observation, or "outlier," is one that appears to differ significantly from other sample test result values in the same population from which it was taken. Two general alternatives are of interest when considering outliers:

a) The outlying observation may be an extreme value of the population caused by the random variability inherent in the data. If this is the case, the observation should be retained and used in the same manner as the other observations.

b) The outlying observation may be the result of gross deviation from the prescribed sampling and/or testing procedures or an error in calculating or recording the numerical value. If this is the case, the observation should be discarded.

1.4 The procedure below provides the steps to take to make the decision whether,

a) The observation is not an outlier and should not be discarded, or

b) The observation is an outlier and should be discarded.

2. PROCEDURE

2.1 Determine whether a testing related physical reason exists for the outlying test value. If a physical reason exists, the outlying test value is excluded from pay factor calculations. Normally, only the individual test value is excluded; the test results for the entire sample are only excluded when the physical reason for the outlying test value applies to the entire sample.

2.1.1 Possible physical reasons for excluding a test value include:

a) *Damaging the sample prior to testing*.

b) *Gross deviation from prescribed test procedure*. If it is determined that a gross deviation from the prescribed test procedure has occurred, the resulting observation should be discarded, whether or not it agrees with the rest of the data.

c) *Test equipment malfunction*.

d) *Computational error was made*. If a computation error is found, it may be corrected and the corrected value used as the test result.

e) *The test result is outside the range of possible results.*

2.1.2 The following are examples of reasons that are **NOT** sufficient for excluding a test value:

a) *The sample was taken from a segregated area of the mat.*

b) *The acceptance test results do not agree with the quality control results.*

c) *The core had paint on it.*

d) *The test result is larger/smaller than all the rest.*

e) *The hot plant malfunctioned.* This is an assignable cause for the test result being different, because the material is different. It is not a reason for discarding a sample or a test result.

2.2 When a physical reason cannot be determined for an apparent outlying value the following calculation procedure should be used to determine whether the test result meets statistical criteria as an outlying value.

3. CALCULATION PROCEDURE FOR DETERMINATION OF STATISTICAL OUTLIERS

3.1 This procedure is based on a two-tailed t-test with a level of significance of 2%, adopted from ASTM E 178 *Dealing with Outlying Observations.* The use of a two-tailed test means that the outlier may be either on the high or the low side of the average. The 2% level of significance means that if it is decided that the value is an outlier, there is only a 2% chance that it is not.

3.1.1 Determine whether there is an assignable cause for the apparent outlier. An assignable cause means that a reason exists for the material being different, for example:

a) The sample was taken at the end of a truckload.

b) There is visible segregation at that location in the mat.

c) The paver wings were dumped at the sample location.

d) The plant was having problems.

e) The loader operator put the aggregate in the wrong bins.

3.1.1.1 If there is an assignable cause, the sample should not be excluded and the analysis should not proceed.

3.1.2 Identify the sample set to be used in the statistical analysis. The statistical procedure being used bases its criteria on the assumption that the samples are part of a normal population. This means that all samples used in the analysis must be part of the same population. Lots produced under different mix designs (or when there have been significant changes to the mix) are to be considered in different populations and should not be combined for the purpose of determination of statistical outliers. A target value change does not always indicate a significant change to the mix.

CASE 1: Compaction

For determination of statistical outliers in compaction lots, use all of the core results from the lot with the suspected outlier. Thus, n is normally 10 for the determination of compaction outliers.

CASE 2: Mix Properties

For determination of statistical outliers in mix properties, use all of the test results from the lot with the suspected outlier and the two previous lots. Thus, n is normally 12 for the determination of mix property outliers.

If there are not two previous lots with the same mix design (or it is the first or second lot in the project), following lots should be used. For example, if the lot containing the suspected outlier is the first lot of a new mix design, use the two following lots in the analysis. If the lot containing the suspected outlier is the second lot of a new mix design, use the previous lot and the following lot in the analysis. If there are not three consecutive lots with the same mix design, the analysis is conducted using only the samples in one or two lots (n will be less than 12).

3.1.3 Calculate the sample average ($\bar{x}$) and standard deviation (s) of ALL of the samples in the sample set using the equations below. The suspected outlier is **NOT** excluded from these calculations.

$$\bar{x} = \frac{\sum x}{n} \qquad (1)$$

$$s = \sqrt{\frac{\sum (x - \bar{x})^2}{n - 1}} \qquad (2)$$

Where: $\bar{x}$ = average of sample test values
x = sample test value
n = number of samples
s = standard deviation

NOTE: Round $\bar{x}$ to one decimal place more than the data used to calculate it and s to two more decimal places more than the data used to calculate it.

3.1.4 Determine the critical value for T from Table 1 using the total number of samples (n) in the sample set.

Table 1
Critical Values for T at 2% significance level (two-tailed test)

n	T
3	1.155
4	1.492
5	1.749
6	1.944
7	2.097
8	2.221
9	2.323
10	2.410
11	2.485
12	2.550

3.1.5 Determine the lower outlier limit (*LO*) and the upper outlier limit (*UO*) using the equations below.

$$LO = \bar{x} - (T \times s) \qquad (3)$$

$$UO = \bar{x} + (T \times s) \qquad (4)$$

Where:
LO = lower outlier limit
UO = upper outlier limit
$\bar{x}$ = average of sample test values
T = critical value from Table 1
s = standard deviation

NOTE: Round LO and UO to the same number of decimal places as the test values.

3.1.6 Provided there is no assignable cause for the occurrence of the test result in question, discard test data which falls outside of the lower and upper outlier limits calculated with equations 3 and 4. The entire sample is not discarded, only the outlying test result.

4. EXAMPLE CALCULATIONS

EXAMPLE 1: Suspected Compaction Outlier

The following 10 core densities were obtained. Is core number 4 an outlier for density? No physical reason or assignable cause could be identified for the low density.

Core	1	2	3	4	5	6	7	8	9	10
Density (pcf)	141.5	141.8	142.3	138.3	141.6	142.0	141.6	141.7	141.0	141.2

$$n = 10$$

$$\bar{x} = 141.30$$

$$s = 1.117$$

From Table 1, $T = 2.410$

$$LO = \bar{x} - (T \times s) = 141.30 - (2.410 \times 1.117) = 138.6$$

$$UO = \bar{x} + (T \times s) = 141.30 + (2.410 \times 1.117) = 144.0$$

Because the density for core number 4 is below the lower outlier limit (LO), core number 4 should be discarded and pay factor determinations should be made using the remaining 9 cores. Note that the calculated values for LO and UO are rounded to the same number of decimal places as the test data, in this case one decimal place.

EXAMPLE 2: Suspected air voids outlier.

The following test results were obtained for three consecutive lots on a project. Is Lot 3, Sample 1 an outlier for air voids? No physical reason or assignable cause could be identified for the high air voids.

Lot 1 Results:

SAMPLE NO.	Bulk Density (pcf)	VOIDS (%)	RICE (pcf)
1	151.8	4.2	158.5
2	152.1	5.8	161.4
3	152.1	4.0	158.5
4	153.2	4.7	160.8

Lot 2 Results:

SAMPLE NO.	Bulk Density (pcf)	VOIDS (%)	RICE (pcf)
1	152.4	4.8	160.0
2	152.7	4.3	159.6
3	152.6	4.3	159.5
4	152.7	3.5	158.3

Lot 3 Results:

SAMPLE NO.	Bulk Density (pcf)	VOIDS (%)	RICE (pcf)
1	149.5	7.3	161.3
2	151.7	5.0	159.7
3	151.9	4.5	159.1
4	151.5	4.9	159.3

$$n = 12$$

$$\bar{x} = 4.78$$

$$s = 0.981$$

From Table 1, $T = 2.550$

$$LO = \bar{x} - (T \times s) = 4.78 - (2.550 \times 0.981) = 2.3$$

$$UO = \bar{x} + (T \times s) = 4.78 + (2.550 \times 0.981) = 7.3$$

The air voids for Lot 3, Sample 1 are equal to the *UO*, thus this value is not an outlier and should be included in the pay factor determination. (The value in question must be outside the lower and upper outlier limits to be considered an outlier.) Note that the

calculated values for LO and UO are rounded to the same number of decimal places as the test data, in this case one decimal place.

IMPORTANT NOTE: The fact that the bulk density for Sample 1 of Lot 3 is an outlier (see Example 3 below) does not make the air voids an outlier.

EXAMPLE 3: Suspected outlier in bulk density, when it is used to calculate the compaction target value.

The data for this example is from a project where the compaction target is calculated as 98% of the bulk density. Using the data in Example 2 above, is the bulk density for Lot 3, sample 1 an outlier? No physical reason or assignable cause could be identified for the low bulk density.

$$n = 12$$

$$\bar{x} = 152.02$$

$$s = 0.934$$

From Table 1, $T = 2.550$

$$LO = \bar{x} - (T \times s) = 152.02 - (2.550 \times 0.934) = 149.6$$

$$UO = \bar{x} + (T \times s) = 152.02 + (2.550 \times 0.934) = 154.4$$

The bulk density for Lot 3, Sample 1 is below the lower outlier limit (LO), thus the bulk density for this sample should be discarded and the compaction target value for Lot 3 should be determined using the average of the remaining 3 bulk densities. Note that the calculated values for LO and UO are rounded to the same number of decimal places as the test data, in this case one decimal place.

James P. Delton, P.E.
Assistant State Engineer
Materials Group

ARIZONA DEPARTMENT OF TRANSPORTATION * MATERIALS GROUP

1221 NORTH 21ST AVENUE PHOENIX, ARIZONA 85009-3740 PHONE (602) 712 - 7231

POLICY AND PROCEDURE DIRECTIVE

James P. Delton
Assistant State Engineer

TO: ALL MANUAL HOLDERS	PPD NO. 11
SUBJECT: APPROVAL OF LABORATORIES TO PERFORM TESTING OF BEARING PADS FOR THE DEPARTMENT	EFFECTIVE DATE: February 27, 2009

1. GENERAL

1.1 This Policy and Procedure Directive supersedes P.P.D. No. 04-2.

1.2 This Policy and Procedure Directive outlines the procedure for approval of laboratories to perform testing of bearing pads for the Department.

1.3 Testing of bearing pads shall be accomplished in accordance with the requirements of Section 1013 of the ADOT Specifications.

2. REQUIREMENTS

2.1 Laboratories must be approved by the Quality Assurance Section and the Structural Materials Testing Section of the ADOT Materials Group prior to performing testing of bearing pads for the Department.

2.2 A laboratory desiring to perform bearing pad testing for the Department may gain approval for either Fabric Bearing Pads or Elastomeric Bearing Pads, or the laboratory may gain approval for both types of bearing pads.

3. PROCEDURE

3.1 Laboratories desiring to perform testing of bearing pads for the Arizona Department of Transportation shall submit a proposal to the Quality Assurance Engineer, Materials Group. The proposal shall contain the experience and qualifications of the laboratory and its technicians in performing bearing pad testing as required by Section 1013 of the ADOT Specifications. The proposal shall also contain a listing of any certifications that the laboratory has in such testing.

3.2 The Materials Quality Assurance Engineer will review the proposal and with the concurrence of the Materials Structural Testing Engineer shall accept or reject the proposal.

3.3 If the proposal is acceptable, an inspection of the laboratory desiring approval will be scheduled.

3.4. A joint team of members of the Materials Quality Assurance Section and the Materials Structural Testing Section will perform an inspection of the laboratory.

3.5 Approval or denial of the laboratory to perform bearing pad testing for the Department will be based on the review of the submitted proposal and the results of the inspection. The Materials Quality Assurance Engineer and the Materials Structural Testing Engineer must concur on the approval or denial of the laboratory.

3.6 The Materials Quality Assurance Engineer notifies the laboratory in writing that they have either been granted or denied approval. A laboratory that is approved shall be listed in the ADOT Directory of Approved Testing Laboratories, which is issued by Materials Quality Assurance Section.

3.7 Following initial approval of a testing laboratory, reapproval must be obtained every 24 months. The Materials Quality Assurance Section will schedule inspections of an approved laboratory on a 24 month cycle. The laboratory will not need to submit a new proposal for reapproval unless there have been changes that will affect their approval status.

3.8 Any laboratory which has been approved must notify the Materials Quality Assurance Engineer of any changes in laboratory ownership, location, or managerial personnel within 60 days of when the change occurs. The Materials Quality Assurance Engineer shall also be notified within 30 days of any changes in supervisory and key technical personnel involved in the testing of bearing pads.

James P. Delton, P.E.
Assistant State Engineer
Materials Group

ARIZONA DEPARTMENT OF TRANSPORTATION * MATERIALS GROUP

1221 NORTH 21ST AVENUE PHOENIX, ARIZONA 85009-3740 PHONE (602) 712 - 7231

POLICY AND PROCEDURE DIRECTIVE

James P. Delton
Assistant State Engineer

TO: ALL MANUAL HOLDERS	PPD NO. 12
SUBJECT: REVIEW OF TEST RESULTS AND ISSUANCE OF TEST REPORTS	EFFECTIVE DATE: February 27, 2009

1. GENERAL

1.1 This Policy and Procedure Directive supersedes P.P.D. No. 04-3.

1.2 This Policy and Procedure Directive provides guidelines for the review of laboratory test results and the issuance of the appropriate test report.

1.3 The *"ADOT System for the Evaluation of Testing Laboratories"* outlines the qualification requirements for individuals responsible for supervising sampling and testing, and for individuals who perform actual sampling and testing.

2. RESPONSIBILITIES

2.1 The test operator shall date, and sign or initial, the test report adjacent to the report of test results for the testing they have completed. Some test reports have a location for the signature of the test operator. Some test reports are designed such that specified standard test methods are indicated. If the test report does not state the test method used, the test method shall be noted on the test report. Any modifications or deviations from the standard test procedure shall also be noted on the test report. Areas are provided for reporting both the test results and the corresponding specification requirements for the required tests. The appropriate test specifications shall be written on the test report to provide the test operator and the lab supervisor with a convenient reference for determining the acceptability of the test results.

2.2 The laboratory supervisor (person accepting technical responsibility for the test report) shall review test results of all testing performed by laboratory personnel under their supervision. In their review, they must ensure that the proper test methods were used, the required tests have been performed, the correct specifications were used, and the test results are recorded correctly. After review and approval of the test results, the lab supervisor shall date and sign the test report, along with noting their title. Test reports that do not have a provision for the signature of the lab supervisor shall be signed, dated, and the notation of their title made in any convenient location on the test report. Any necessary comments shall be recorded on the test report. If an area for comments is not provided, the comments shall be placed in any convenient place on the test report.

2.3 Test reports have boxes labeled as "White", "Yellow", and "Blue" which are used to indicate the acceptance status of the material. The appropriate box shall be marked, as described in Section 3 below.

2.4 Test results shall be promptly reported to the appropriate individual. The person contacted and the date shall be recorded on the test report.

3. ISSUANCE OF TEST REPORTS

3.1 When tests have been completed and the results reviewed, copies of the test report shall be promptly made and distributed to the appropriate individuals. The copies shall be made utilizing the appropriate paper color to indicate the acceptance status of the material. The significance of each of the different colors is as described below:

3.1.1 White test reports are used when the sample complies with all the requirements of the specifications and the material is approved for use.

3.1.2 Yellow test reports are issued when the sample deviates from the specifications and there is provision in the specifications for acceptance of the material with a price reduction. For example, asphalt cement that does not meet the specified requirements for 100 percent of contract unit price may be accepted at a lower percentage.

3.1.3 Blue test reports indicate non-compliance with the specifications. Material with test results reported on a blue sheet is only to be used if specification compliance is obtained through corrective action or through the issuance of a supplemental agreement. If a blue test report is issued on a material already in place, the Engineer will evaluate whether the material will be allowed to remain in place in accordance with Subsection 105.04 of the Specifications.

James P. Delton, P.E.
Assistant State Engineer
Materials Group

ARIZONA DEPARTMENT OF TRANSPORTATION * MATERIALS GROUP

1221 NORTH 21ST AVENUE PHOENIX, ARIZONA 85009-3740 PHONE (602) 712 - 7231

POLICY AND PROCEDURE DIRECTIVE

James P. Delton
Assistant State Engineer

TO: ALL MANUAL HOLDERS	PPD NO. 13a
SUBJECT: CERTIFICATION AND ACCEPTANCE OF HYDRAULIC CEMENTS, FLY ASH, NATURAL POZZOLAN, SILICA FUME, AND LIME	EFFECTIVE DATE: April 14, 2010

1. GENERAL

1.1 This Policy and Procedure Directive outlines the procedures to be followed for certification and acceptance of hydraulic cements, fly ash, natural pozzolan, silica fume, and lime.

1.2 This Policy and Procedure Directive modifies the certification procedures for hydraulic cements, fly ash, natural pozzolan, and lime. It shall be used in conjunction with the requirements of Subsection 106.05 of the Specifications.

1.3 The certification and acceptance of hydraulic cements, fly ash, natural pozzolan, or lime for use in Portland cement concrete or asphaltic concrete is performed as specified in Section 2.

1.4 The certification and acceptance of silica fume for use in Portland cement concrete is performed as specified in Section 3.

1.5 The certification and acceptance of lime or hydraulic cement for use in soil stabilization (Lime Treated Subgrade, Cement Treated Subgrade, or Cement Treated Base) is performed as specified in Section 4.

1.6 The acceptance of Portland cement and hydrated lime for use in mortar or grout is performed as specified in Section 5.

2. CERTIFICATION AND ACCEPTANCE OF HYDRAULIC CEMENTS, FLY ASH, NATURAL POZZOLAN, OR LIME FOR USE IN PORTLAND CEMENT CONCRETE OR ASPHALTIC CONCRETE

2.1 Hydraulic cement, fly ash, and natural pozzolan used in Portland cement concrete shall conform to the requirements of Section 1006 of the Specifications.

2.2 Portland cement, blended hydraulic cement, and hydrated lime used as a mineral admixture in asphaltic concrete shall conform to the following:

Material	Requirement
Portland Cement, Type I or II	ASTM C 150
Blended Hydraulic Cement, Type IP	ASTM C 595
Hydrated Lime	ASTM C 1097

2.3 The certification and acceptance of hydraulic cements, fly ash, natural pozzolan, or lime for use in Portland cement concrete or asphaltic concrete will be on the basis of the material originating from an Approved Materials Source.

2.4 Approved Materials Source Lists for "Hydraulic Cements", "Fly Ash and Natural Pozzolan", and "Lime (mineral admixture for asphaltic concrete)" are maintained by Materials Group, Structural Materials Testing Section. Current lists are available on the Materials Group, Structural Materials Testing Section homepage through the ADOT intranet (ADOTNet) and the ADOT internet website.

2.5 Project personnel shall verify that materials being used on their project are on the current Approved Materials Source List.

2.6 Certificates of Compliance and Certificates of Analysis are not required to be submitted with deliveries of material.

2.7 No samples of hydraulic cement, fly ash, natural pozzolan, or lime are required.

2.7.1 The Department reserves the right to sample and test material for acceptance from any source without notification.

2.8 Source approval of hydraulic cement, fly ash, natural pozzolan, or lime producers/suppliers will be based on the satisfactory submittal to the Materials Group, Structural Materials Testing Engineer, on a monthly and timely basis, of the following:

2.8.1 A Certificate of Compliance which lists the lots produced during that month.

2.8.2 A separate Certificate of Analysis for each lot shown on the corresponding Certificate of Compliance for that month.

2.8.3 Certificates of Compliance and Certificates of Analysis shall be submitted in electronic format (pdf) to the Structural Materials Testing Engineer at “cert@azdot.gov”.

2.9 Examples of typical Certificates of Compliance and Certificates of Analysis are given in the attachments to this Policy and Procedure Directive.

2.9.1 Attachment #1 gives an example of a Certificate of Compliance for cement.

2.9.2 Attachment #2 gives an example of a Certificate of Analysis for cement.

2.9.3 Attachment #3 gives an example of a Certificate of Compliance for fly ash.

2.9.4 Attachment #4 gives an example of a Certificate of Analysis for fly ash.

2.9.5 Certificates of Compliance and Certificates of Analysis for natural pozzolan would be similar to Certificates of Compliance and Certificates of Analysis for fly ash.

2.9.6 Attachment #5 gives an example of a Certificate of Compliance for lime.

2.9.7 Attachment #6 gives an example of a Certificate of Analysis for lime.

2.10 To maintain an active status on the Approved Materials Source List, the producer/supplier shall, on a monthly and timely basis, provide either the required Certificates specified above, or other documentation described below.

2.10.1 If no materials are produced during any given monthly reporting period, the producer/supplier shall so notify the Structural Materials Testing Engineer by email at "cert@azdot.gov".

2.10.2 If no materials are produced during any given monthly reporting period, but materials are shipped from a previously certified lot of material, the producer/supplier shall so notify the Structural Materials Testing Engineer by email at "cert@azdot.gov".

2.10.3 If there is a temporary (more than one month) stop in production of materials from a specific source, the producer/supplier shall so notify the Structural Materials Testing Engineer by email at "cert@azdot.gov".

2.11 If there is a permanent stop in production of materials from a specific source, the producer/supplier shall so notify the Structural Materials Testing Engineer by email at "cert@azdot.gov".

2.12 The suspension of source approval shall be instituted for any of the following reasons. The Structural Materials Testing Engineer will notify the producer/supplier in writing (by letter or email) of such suspension.

(a) The producer/supplier provides materials from an approved source which fail to meet specification requirements to an ADOT project.

(b) The producer/supplier fails to provide the required documents to the Department as specified for the source approval on a monthly and timely basis.

2.12.1 Any suspension shall be in effect until such time that the hydraulic cement, fly ash, natural pozzolan, or lime producer/supplier can demonstrate that the deficiency in the material has been corrected and the product meets specification requirements, and/or the requirements for submittal of the required documents have been met. The Structural Materials Testing Engineer will notify the producer/supplier in writing (by letter or email) of the removal of such suspension.

3. CERTIFICATION AND ACCEPTANCE OF SILICA FUME FOR USE IN PORTLAND CEMENT CONCRETE

3.1 Silica fume used in Portland cement concrete shall conform to the requirements of ASTM C 1240.

3.2 A Certificate of Compliance conforming to the requirements of Subsection 106.05 shall be submitted for each delivery of silica fume.

3.3 No samples of silica fume are required.

3.3.1 The Department reserves the right to sample and test material which has been accepted on the basis of a Certificate of Compliance.

4. CERTIFICATION AND ACCEPTANCE OF LIME OR HYDRAULIC CEMENT FOR USE IN SOIL STABILIZATION (LIME TREATED SUBGRADE, CEMENT TREATED SUBGRADE, OR CEMENT TREATED BASE)

4.1 Lime used in soil stabilization shall conform to the requirements of ASTM C 977 and Section 301 of the Specifications.

4.2 Hydraulic cement used in soil stabilization shall conform to the requirements of Section 302 or Section 304 of the Specifications.

4.3 If desired by the producer/supplier, the acceptance and certification of hydraulic cement used in soil stabilization may be performed as specified in Section 2. Otherwise, a Certificate of Compliance conforming to the requirements of Subsection 106.05 shall be submitted for each delivery of hydraulic cement.

4.4 A Certificate of Compliance conforming to the requirements of Subsection 106.05 shall be submitted for each delivery of lime.

4.5 No samples of lime or hydraulic cement are required.

4.5.1 The Department reserves the right to sample and test material as deemed necessary by the Engineer.

5. ACCEPTANCE OF PORTLAND CEMENT AND HYDRATED LIME FOR USE IN MORTAR OR GROUT

5.1 Portland cement used in mortar or grout shall conform to the requirements of Section 1006 of the ADOT Specifications.

5.2 Hydrated lime used in mortar or grout shall conform to the requirements of ASTM C 207, Type N.

5.3 Certificates of Compliance or Certificates of Analysis are not required.

5.4 Portland cement and hydrated lime used in mortar or grout shall be approved by the Engineer.

5.4.1 If desired by the producer/supplier, the acceptance and certification of Portland cement used in mortar and grout may be performed as specified in Section 2.

5.5 No samples of Portland cement or hydrated lime are required.

5.5.1 The Department reserves the right to sample and test material as deemed necessary by the Engineer.

James P. Delton, P.E.
Assistant State Engineer
Materials Group

Attachments (6)

ACME CEMENT COMPANY
9876 N. Notled Drive
Bigtown, AZ 85555
Phone No. 602-555-4321

CERTIFICATE OF COMPLIANCE

EXAMPLE

Date: April 29, 2010
Material: Type II/V Portland Cement
Source: Newton Plant

The following lots of Type II/V Portland Cement have been produced during the month of **March 2010** at the Newton Plant in Bigtown, Arizona.

Lot Number
0011562
0011563
0011564
0011565
0011566
0011567
0011568
0011569
0011570

I hereby certify that the Type II/V Portland Cement produced in the lots listed above meets or exceeds the requirements specified in ASTM C 150 and Subsection 1006-2.01 of the Arizona Department of Transportation Specifications.

Respectfully,

(Signature)
Billy B. Bop
General Manager

ACME CEMENT COMPANY

9876 N. Notled Drive
Bigtown, AZ 85555
Phone No. 602-555-4321

CERTIFICATE OF ANALYSIS

Date: April 29, 2010
Material: Type II/V Portland Cement
Source: Newton Plant

The following are the test results for **Lot Number 0011566** of Type II/V Portland Cement produced during the month of **March 2010** at the Newton Plant in Bigtown, Arizona.

TESTS	RESULTS	SPECIFICATIONS	
		TYPE II	TYPE V
Silicon Dioxide (SiO_2), %	20.9		
Aluminum Oxide (Al_2O_3), %	4.0	6.0 max.	
Iron Oxide (Fe_2O_3), %	3.7	6.0 max.	
Calcium Oxide (CaO), %	63.5		
Magnesium Oxide (MgO), %	2.8	6.0 max.	6.0 max.
Sulfur Trioxide (SO_3), %	2.9	3.0 max.	2.3 max.*
Loss on Ignition, %	2.6	3.0 max.	3.0 max.
Insoluble Residue, %	0.52	0.75 max.	0.75 max.
Equivalent Alkalies, %	0.56	0.60 max.	0.60 max.
Carbon Dioxide, (CO_2), %	1.7		
Limestone, %	4.5	5.0 max.	5.0 max
Calcium Carbonate, ($CaCO_3$ in Limestone), %	88	70 min.	70 min.
Potential Composition:			
C_3S, %	51		
C_2S, %	21		
C_3A, %	4	8 max.	5 max
C_4AF, %	11		
$C_3S + 4.75(C_3A)$, %	70	100 max.	
$C_4AF + 2(C_3A)$, %	19		25 max.
Physical Analysis:			
Blaine Fineness, m^2/kg	406	280 min.	280 min.
Air Content, %	7	12 max.	12 max.
Autoclave Expansion, %	0.03	0.80 max.	0.80 max.
3-Day Compressive Strength, psi	3980	1450 min.	1160 min.
7-Day Compressive Strength, psi	5060	2470 min.	2180 min.
28-Day Compressive Strength, psi	6350		3050 min.
Autoclave Expansion, %	0.03	0.80 max.	0.80 max
Initial Vicat, minutes	120	45 min.	45 min.
Mortar Bar Expansion, %	0.010	0.020 max.	0.020 max.

*Must conform to ASTM C 1038 mortar bar expansion limit of 0.020% if the maximum percent specified for SO_3 is exceeded.

I certify that **Lot Number 0011566** of Type II/V Portland Cement, produced during the month of **March 2010** at the Newton Plant, meets or exceeds the requirements specified in ASTM C 150 and Subsection 1006-2.01 of the Arizona Department of Transportation Specifications.

Respectfully,

(Signature)
Billy B. Bop
General Manager

EXAMPLE

FLYASH R' US
1234 N. Gwegowy Way
Littletown, AZ 85111
Phone No. 602-555-6789

CERTIFICATE OF COMPLIANCE

EXAMPLE

Date: May 13, 2010
Material: Class F Fly Ash
Source: Ashley Plant

The following lots of Class F Fly Ash have been produced during the month of **March 2010** at the Ashley Plant in Littletown, Arizona.

Lot Number
041562
041563
041564
041565
041566
041567
041568
041569
041570

I hereby certify that the Class F Fly Ash produced in the lots listed above meets or exceeds the requirements specified in ASTM C 618 and Subsection 1006-2.04 of the Arizona Department of Transportation Specifications.

Respectfully,

_____*(Signature)*_____
Mat Erial
President

FLYASH R' US
1234 N. Gwegowy Way
Littletown, AZ 85111
Phone No. 602-555-6789

CERTIFICATE OF ANALYSIS

Date: May 13, 2010
Material: Class F Fly Ash
Source: Ashley Plant

The following are the test results for **Lot Number 041567** of Class F Fly Ash produced during the month of **March 2010** at the Ashley Plant in Littletown, Arizona.

TESTS	RESULTS	SPECIFICATIONS
Silicon Dioxide (SiO_2), %	61.12	
Aluminum Oxide (Al_2O_3), %	22.09	
Iron Oxide (Fe_2O_3), %	5.78	
Sum of SiO_2, Al_2O_3, Fe_2O_3, %	89.99	70 min.
Calcium Oxide (CaO), %	4.79	
Magnesium Oxide (MgO), %	0.98	
Sulfur Trioxide (SO_3), %	0.42	5.0 max.
Sodium Oxide (Na_2O), %	0.87	
Potassium Oxide (K_2O), %	1.30	
Total Alkalies (as Na_2O), %	1.73	
Available Alkalies (as Na_2O), %	0.50	
Moisture Content, %	0.03	3.0 max.
Loss on Ignition, %	0.21	3.0 max.
Amount Retained on No. 325 Sieve, %	26.14	34 max.
Specific Gravity	2.25	
Autoclave Soundness, %	-0.01	0.8 max.
SAI, 7 Days, % of Control	76.5	75 min.*
SAI, 28 Days, % of Control	95.5	75 min.*
Water Required, % of Control	96.3	105 max.

*Meeting the 7 day or 28 day Strength Activity Index will indicate specification compliance.

I certify that **Lot Number 041567** of Class F fly Ash, produced during the month of **March 2010** at the Ashley Plant, meets or exceeds the requirements specified in ASTM C 618 and Subsection 1006-2.04 of the Arizona Department of Transportation Specifications.

Respectfully,

(Signature)

Mat Erial
President

SAMPLE

LIME INCORPORATED
4321 South Seger Drive
Middletown, AZ 85999
Phone No. 602-555-9876

CERTIFICATE OF COMPLIANCE

Date: April 2, 2010
Material: Hydrated Lime (ASTM C 1097)
Source: Seger Plant

The following lots of Hydrated Lime (ASTM C 1097) have been produced during the month of **March 2010** at the Seger Plant in Middletown, Arizona.

Lot Number
030110
030810
031510
032210
032910

I hereby certify that the Hydrated Lime produced in the lots listed above meets or exceeds the requirements specified in ASTM C 1097.

Respectfully,

(Signature)
Barbie Que
Vice President, Quality Control

EXAMPLE

LIME INCORPORATED
4321 South Seger Drive
Middletown, AZ 85999
Phone No. 602-555-9876

CERTIFICATE OF ANALYSIS

EXAMPLE

Date: April 2, 2010
Material: Hydrated Lime (ASTM C 1097)
Source: Seger Plant

The following are the test results for **Lot Number 030810** of Hydrated Lime (ASTM C 1097) produced during the month of **March 2010** at the Seger Plant in Middletown, Arizona.

TESTS	RESULTS	SPECIFICATIONS
Total Calcium Oxide (CaO) and Magnesium Oxide (MgO), %	97.37	90.0 min.
Carbon Dioxide, %	0.69	5.0 max.
Unhydrated CaO and MgO (Insolubles), %	0.90	5.0 max.
Free Moisture of Dry Hydrates, %	0.40	2.0 max
Retained on No. 30 Sieve, %	0.19	3.0 max.
Retained on No. 200 Sieve, %	5.65	30 max.

I certify that **Lot Number 030810** of Hydrated Lime produced during the month of **March 2010** at the Seger Plant, meets or exceeds the requirements specified in ASTM C 1097.

Respectfully,

(Signature)
Barbie Que
Vice President, Quality Control

ARIZONA DEPARTMENT OF TRANSPORTATION * MATERIALS GROUP

1221 NORTH 21ST AVENUE PHOENIX, ARIZONA 85009-3740 PHONE (602) 712- 7231

POLICY AND PROCEDURE DIRECTIVE

TO: ALL MANUAL HOLDERS	PPD NO. 14a
SUBJECT: TESTING AND CERTIFICATION OF BITUMINOUS DISTRIBUTOR TRUCKS	EFFECTIVE DATE: November 5, 2014

1. GENERAL

1.1 Prior to the spreading of bituminous material on any ADOT project, bituminous distributor trucks shall have been tested in accordance with Arizona Test Method 411, "Determination of Bituminous Distributor Truck Transverse Spread Rate", and shall have been certified within 12 months prior to the date of spreading in accordance with the requirements of Subsection 404-3.02(A) of the ADOT Specifications.

1.2 ADOT Regional Materials Engineers are responsible for the certification of bituminous distributor trucks.

1.3 All testing, including the preparation of test pads and test plates, shall be performed by an independent testing laboratory which has been approved by the respective ADOT Regional Materials Engineer. A professional engineer, registered in the State of Arizona and employed by the independent testing laboratory, shall be responsible for all testing and test results.

1.4 The distributor truck owner shall be responsible for all costs associated with the testing performed by the independent testing laboratory.

1.5 Upon completion of testing, the independent testing laboratory shall issue a letter to the owner of the distributor truck. The letter shall include the following:

1.5.1 A statement that the testing was performed in accordance with the requirements of Arizona Test Method 411.

1.5.2 The name and location of the facility where the testing was performed.

1.5.3 The date that the testing was performed.

1.5.4 Identification of the truck for which testing was performed. Such identification shall consist of:

1.5.4.1 Name of the owner of the distributor truck.

1.5.4.2 Truck Number.

1.5.4.3 Truck License Plate Number.

1.5.4.4 Truck Make and VIN Number.

1.5.5 Name of person performing the testing.

1.5.6 Name, signature, and seal of the registered professional engineer responsible for the testing and test results. The date shall be recorded as part of the seal.

1.5.6.1 An example of a typical letter from the independent testing laboratory to the owner of the distributor truck is shown in **Attachment #1**.

1.5.7 A copy of the test results shall be attached to the letter from the independent testing laboratory. The test results shall be sealed, signed, and dated by the engineer responsible for the testing.

1.5.7.1 An example of the test results is shown in **Attachment #2**.

1.6 The owner of the distributor truck shall submit the letter from the independent testing laboratory, along with the accompanying test results, to the respective ADOT Regional Materials Engineer.

1.6.1 The Regional Materials Engineer shall review the submittal from the owner of the distributor truck for accuracy and completeness. If the submittal is satisfactory, the Regional Materials Engineer will approve the test results.

1.6.2 Upon approval of the bituminous distributor truck transverse spread rate test results, the respective ADOT Regional Materials Engineer will issue a completed "Certificate of Test" and a completed "ADOT Bituminous Distributor Truck Certification" sticker to the owner of the distributor truck. Illustrations of a blank Certificate of Test and a blank certification sticker are shown in **Attachment #3** and **Attachment #4**, respectively.

1.7 The owner of the distributor truck shall apply the completed certification sticker to the inside of the driver's side door of the truck in a clearly visible location. The Certificate of Test shall be kept in the distributor truck and shall be readily available for review by the Engineer.

1.8 Bituminous distributor trucks that do not have a valid and current Certificate of Test and ADOT certification sticker will not be allowed to supply bituminous materials on ADOT projects.

1.9 Regardless of certification, the Engineer may at any time require that distributor trucks be tested to determine their acceptability.

_Paul T. Burch_____
Paul T. Burch, P.E.
Assistant State Engineer (Acting)
Materials Group

Attachments (4)

Letterhead of Approved Independent Laboratory
(Name of Laboratory is shown as "ABC" below)

Month, Day, Year

First Name, Last Name
Title of Position Held
Owner of Distributor Truck *(Company Name is shown as "XYZ" below)*
Address
City, State Zip

RE: Bituminous Distributor Truck Certification

Dear *(_____),*

As requested and authorized by XYZ Company, ABC laboratory has completed testing on the following bituminous distributor truck which is owned and operated by XYZ.

Truck Make: _____ VIN Number: _____

Truck Number: _____ License Plate Number:_____

Testing was performed in accordance with the requirements of Arizona Test Method 411, "Determination of Transverse Distributor Spread Rate".

Testing was conducted by the undersigned at *(name of testing facility)* on (*Date*). Prior to performing the testing, the pads were prepared, weighed, and assembled in accordance with Arizona Test Method 411. Spray bar application of the bituminous material was observed. The pads were removed from the metal sheets and weighed to determine the application rate of the bituminous material. The data was analyzed per Arizona Test Method 411 and Subsection 404-3.02(A) of the ADOT Specifications.

A summary of the test results is attached to this report for your information and review. Please submit this letter, along with the accompanying test results, to the respective ADOT Regional Materials Engineer for their approval and certification of the referenced bituminous distributor truck.

If you have any questions regarding this information, or if we may be of further assistance in any way, please do not hesitate to contact us.

Sincerely,

_____*(Name)*_____

_____*(Title of Position Held)*_____

_____*(Signature)*_____

Reviewed By: _____*(Name)*_____

_____*(Title of Position Held)*____

(Sealed, Signed, and Dated)

Attachment

EXAMPLE OF LETTER FROM THE INDEPENDENT TESTING LABORATORY TO THE OWNER OF THE DISTRIBUTOR TRUCK

(Name of Approved Independent Laboratory)

TRANSVERSE DISTRIBUTOR TRUCK SPREAD RATE

Arizona Test Method 411

DISTRIBUTOR TRUCK OWNER: _____ **TESTED BY:** _____ **DATE:** _____

TRUCK #: _____ **LICENSE PLATE #:** _____ **VIN #:** _____ **SPRAY WIDTH:** _____ **FT.**

TEST FACILITY: _____ **JOB #:** _____

TYPE OF BITUMINOUS MATERIAL USED: _____ **TEMP.:** _____ **TEST RESULT: PASS:** X **FAIL:** _____

PAD #	WT. PAD + BIT. MATL	PAD TARE	WT. BIT. MATL	* SPREAD RATE	PAD OUT	REMARKS	PAD #	WT. PAD + BIT. MATL	PAD TARE	WT. BIT. MATL	* SPREAD RATE	PAD OUT	REMARKS
1		8.9	0.0	0.000		OMIT	26	21.0	8.8	12.3	0.132		
2	21.7	8.8	12.8	0.137			27	20.8	8.9	12.0	0.128		
3	21.9	8.9	13.0	0.139			28	20.6	8.8	11.8	0.126		
4	22.0	8.7	13.3	0.142			29	20.9	8.9	12.1	0.129		
5	22.2	8.8	13.3	0.142			30	21.0	8.8	12.3	0.132		
6	21.9	8.8	13.1	0.140			31	20.3	8.9	11.4	0.122		
7	21.5	8.9	12.7	0.136			32	21.2	8.8	12.4	0.133		
8	21.6	8.8	12.8	0.137			33	21.9	8.8	13.2	0.141		
9	21.0	8.8	12.1	0.129			34	21.6	8.8	12.8	0.137		
10	21.7	8.8	12.9	0.138			35	21.8	8.8	13.0	0.139		
11	22.3	8.9	13.4	0.143			36	21.2	8.8	12.4	0.133		
12	20.5	8.9	11.6	0.124			37	21.1	8.8	12.3	0.132		
13	22.0	8.9	13.1	0.140			38	20.0	8.8	11.2	0.120		
14	21.7	8.9	12.8	0.137			39	20.2	8.9	11.3	0.121		
15	21.1	8.9	12.2	0.131			40	21.9	8.8	13.1	0.140		
16	19.6	8.8	10.9	0.117	X		41	21.5	8.8	12.7	0.136		
17	20.9	8.9	12.1	0.129			42	21.8	8.8	13.0	0.139		
18	20.8	8.9	11.9	0.127			43	21.0	8.8	12.2	0.131		
19	20.3	8.9	11.4	0.122			44	21.1	8.8	12.2	0.131		
20	20.9	8.8	12.1	0.129			45	21.7	8.9	12.8	0.137		
21	21.0	8.9	12.2	0.131			46	21.6	8.8	12.8	0.137		
22	20.9	8.8	12.1	0.129			47	22.3	8.8	13.5	0.144		
23	21.2	8.8	12.4	0.133			48	23.0	8.8	14.2	0.152	X	
24	20.7	8.8	11.9	0.127			49	21.5	8.8	12.6	0.135		
25	20.7	8.8	11.9	0.127			50	19.9	8.9	11.0	0.118	X	
							51		8.8	0.0	0.000		OMIT

*** SPREAD RATE = GALLONS PER SQ. YD.**

TOTAL NUMBER OF PADS OUTSIDE ACCEPTABLE RANGE: 3

AVG. PAD TARE: 8.8

AVG. SPREAD RATE: 0.133 GALS./SQ. YD.

TOTAL SPREAD: 6.5 GALS.

ACCEPTABLE RANGE: UPPER: 0.146 **LOWER:** 0.120

SPECIFICATION LIMITS: Average Spread Rate ±10% or ±0.02 Gallons per Sq. Yd., whichever is less, per Subsection 404-3.02(A)

REMARKS: _____

Tested By: *(Name)*
(Title of Position Held)
(Phone Number)
(Signature)

Reviewed By: *(Name)*
(Title of Position Held)

Testing Facility: *(Name)*
(Address)
(City, State, Zip)

(Sealed, Signed, Dated)

EXAMPLE TEST RESULTS

ADOT
Intermodal Transportation

Certificate of Test

RE: Bituminous Distributor Truck Transverse Spread Rate
(Arizona Test Method 411)

Name of Approved Independent
Laboratory Performing Testing: _____

Test Date: _____ Distributor Truck Owner: _____

Truck Make: _____ VIN Number: _____

Truck Number: _____ License Plate Number: _____

Date of Certificate Issuance: _____

Date of Certificate Expiration: _____

This is to certify that the distributor truck identified above complies with the requirements of Arizona Test Method 411 and Subsection 404-3.02(A) of the ADOT Specifications.

(Region Name) Regional Materials Engineer: _____*(Name)*_____

_____*(Signature)*_____

BLANK CERTIFICATE OF TEST

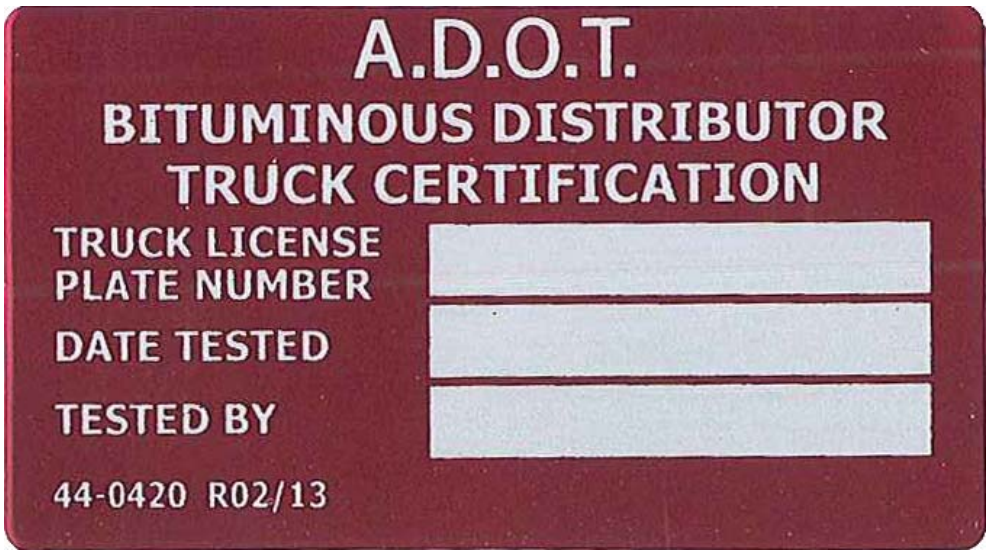

(Sticker shown above is larger than actual size.)

(Sticker has silver lettering on a red background.)

BLANK ADOT BITUMINOUS DISTRIBUTOR TRUCK CERTIFICATION STICKER

ARIZONA DEPARTMENT OF TRANSPORTATION * MATERIALS GROUP

1221 NORTH 21ST AVENUE PHOENIX, ARIZONA 85009-3740 PHONE (602) 712 - 7231

POLICY AND PROCEDURE DIRECTIVE

TO: ALL MANUAL HOLDERS	PPD NO. 15a
SUBJECT: SUBMITTAL AND APPROVAL OF PORTLAND CEMENT CONCRETE MIX DESIGNS	EFFECTIVE DATE: April 19, 2013

1. GENERAL

1.1 This Policy and Procedure Directive outlines the procedure to be followed for the submittal and approval of new, and previously approved or used, Portland cement concrete (P.C.C.) mix designs.

1.2 A previously approved or used mix design is defined as either:

(a) One that has been approved, or used successfully, on an ADOT project within the past 24 months and is recorded in the ADOT Concrete Cylinder Report (CCR) program.

(b) One that has been used successfully on a non-ADOT project within the past 24 months, and meets the criteria specified herein.

1.3 A trial batch shall be required for any mix design that does not meet the requirements specified in Subsection 1.2.

1.4 All mix designs, for other than precast or prestressed concrete, must be approved by the Regional Materials Engineer. See Section 3 for additional information.

1.4.1 The Regional Materials Engineer (RME) will maintain a list of all approved P.C.C. mix designs, for other than precast or prestressed concrete, in the ADOT Concrete Cylinder Report (CCR) program. The RME will also have the responsibility of entering all such approved mix designs in the CCR program for review by project personnel and other authorized individuals.

1.5 All mix designs for precast or prestressed concrete must be approved by the Materials Structural Testing Section. See Section 4 for additional information.

1.5.1 The Materials Structural Testing Section will maintain a list of all approved P.C.C. mix designs for precast or prestressed concrete in the ADOT Concrete Cylinder Report (CCR) program. The Materials Structural Testing Section will also have the responsibility of

entering all such approved mix designs in the CCR program for review by project personnel and other authorized individuals.

1.6 Approval of mix designs shall not relieve the contractor of full responsibility for the results obtained.

1.7 Concrete mix design submittals will be required from the prime contractor for the project records. Qualified subcontractors on the project may use mix designs that have been identified by the prime contractor as proposed for use on the project and approved by the Engineer.

1.8 Each new or previously used mix design must include a product code, plant designation, and supplier, along with all data required in Subsection 1006-3.02 of the Specifications. A single product code may include multiple sources of aggregate, cement, fly ash, natural pozzolan, and silica fume. When multiple sources of material are used under one product code, documentation must be provided which shows similar performance using materials from each source. Multiple sources of material must be listed on the mix design as alternative sources.

1.9 An example of a typical P.C.C. mix design is given in Attachment #3. The actual mix design submittal format from individual concrete suppliers will vary. A checklist is provided in Attachment #4 that may be used to verify that all required items are included in the mix design.

2. MINIMUM OVER-DESIGN REQUIREMENTS

2.1 The minimum over-design requirement for all classes and strengths of concrete shall be established for 28-day compressive strength, unless otherwise specified. Trial batch results, prior to the specified compressive strength acceptance age, may be used if they meet the minimum over-design requirement for the specified acceptance age. When production data is available in accordance with Subsection 2.1.3, the over-design requirement may be established by either using that data or by adhering to a minimum 20% over-design. When production data is used to determine the over-design requirement, the performance of the proposed mix design must equal or exceed the over-design requirement determined in Table B. When production data is not available, or if otherwise desired, the over-design requirement shall be a minimum of 20% of the specified design compressive strength. Trial mixtures may be from laboratory trial batches or full-scale trial batches. Laboratory trial batches are defined in Note 2 of Attachment #1 and Attachment #2. Full-scale trial batches are defined in Note 1 of Attachment #1 and Attachment #2.

2.1.1 The water/cementitious material ratio (w/cm) and cementitious material content for each class and strength of concrete must be in compliance with the specified requirements.

2.1.2 Trial mixtures shall have slump results within the range specified for the proposed work. When air-entrained concrete is specified, the air content shall be in compliance with the specified requirements.

2.1.3 When a production facility has strength test records from an ADOT approved laboratory, which are not more than 24 months old, a sample standard deviation (s_s) may be used to establish the required over-design. Test records shall comply with the following criteria:

(a) Shall represent materials, quality control procedures, and conditions similar to those expected on the project.

(b) Shall represent concrete produced to meet a compressive strength, or strengths, within 1000 psi of the specified design compressive strength.

(c) Shall consist of at least 15 consecutive strength tests that span a period of not less than 45 days. If the test record consists of at least 30 consecutive tests, the standard deviation (s_s) of those tests is used. If the test record consists of 15 to 29 consecutive tests, the standard deviation of those tests shall be modified in accordance with Table A.

Table A	
No. of tests *	Modification factor for sample standard deviation †
< 15	Minimum 20% over-design
15	1.16
20	1.08
25	1.03
30 or more	1.00

* For 15 to 29 tests, interpolate for intermediate number of tests.

† Modified sample standard deviation, s_s, to be used to determine the required minimum over-design compressive strength, f'_{cr}, in Table B.

2.1.3.1 The required minimum over-design compressive strength shall be determined by the equations shown in Table B.

Table B	
Specified design compressive strength, psi	Required minimum over-design compressive strength, psi
$f'_c \leq 5000$	Use the larger value computed from these two equations: $f'_{cr} = f'_c + 1.34s_s$ $f'_{cr} = f'_c + 2.33s_s - 500$
$f'_c > 5000$	Use the larger value computed from these two equations: $f'_{cr} = f'_c + 1.34s_s$ $f'_{cr} = 0.90\ f'_c + 2.33s_s$
f'_c = Specified design compressive strength. f'_{cr} = Required minimum over-design compressive strength. s_s = Standard deviation, or modified standard deviation, as determined in Subsection 2.1.3(c) and Table A.	

2.1.4 Trial mixtures with a range of proportions that will produce a corresponding range of compressive strengths encompassing the minimum over-design compressive strength may be used to determine the specified mix design proportions. This will require multiple trial batches with different mixture proportions. Documentation must be submitted which clearly indicates how the compressive strength is related to the different mixture proportions.

3. PROJECT/REGIONAL MATERIALS ENGINEER RESPONSIBILITES

3.1 Attachment #1, “P.C.C. Mix Design Submittal and Approval Process for other than Precast or Prestressed Concrete”, provides the submittal and approval process for both new and previously used mix designs for other than precast or prestressed concrete. All mix designs will require approval for the intended use on a project. For previously used mix designs, this will include a check of the intended use as well as a review of the mix history in the CCR program.

3.2 Mix designs, for other than precast or prestressed concrete, must be prepared by or under the direction of, and signed by, an individual with one of the following qualifications:

(a) A registered professional engineer.

(b) A NICET (National Institute for Certification in Engineering Technologies) Level III or higher certified technician in the concrete subfield.

(c) A NRMCA (National Ready Mixed Concrete Association) Level 3 Certified Concrete Technologist.

(d) An ACI (American Concrete Institute) Certified Concrete Laboratory Testing Technician Level 2 or Grade II.

3.2.1 Individuals preparing and submitting mix designs, for other than precast or prestressed concrete, shall have experience in the development of such mix designs and mix design testing.

3.3 The following outlines the process that is to be followed for submittal and approval of P.C.C. mix designs for other than precast or prestressed concrete:

(1) The Resident Engineer receives the mix design submittal from the prime contractor and reviews the mix design submittal for accuracy, completeness, and identification/appropriateness of its intended use. For mix designs that have previously been used successfully on non-ADOT projects within the past 24 months, the mix design submittal <u>must</u> include supporting test data meeting the requirements of Subsection 2.1.3 from an ADOT approved laboratory. For mix designs that have previously been approved, or used successfully, on ADOT projects within the past 24 months, it <u>may</u> be required that the mix design submittal include supporting data from an ADOT approved laboratory.

(2) Within two working days after receiving the mix design submittal, the Resident Engineer sends a copy to the Regional Materials Engineer.

(3) The Regional Materials Engineer reviews the mix design submittal for accuracy and completeness. In addition, the Regional Materials Engineer reviews mix history if available. The Regional Materials Engineer will determine if a trial batch will be required in accordance with Attachment #1. When a trial batch is required, it must meet the requirements of Section 2. The mix design will be approved only after the receipt of all data, including the test results for compressive strength.

(4) The Regional Materials Engineer will approve or disapprove the use of the mix design and notify the Resident Engineer within five working days of receiving all required information, including the trial batch results.

(5) The Regional Materials Engineer enters approved mix designs into the CCR program as soon as possible.

3.4 The Resident Engineer may accept a letter listing specific previously approved mix designs that the contractor intends to use on the project. Such a list shall clearly identify the project name and number (including TRACS number), contractor, mix design product codes, intended use, supplier, and primary plant and back-up plants. Such letter shall certify that the current plant production of the mix design proposed for the use does not deviate from the previously approved mix design by more than the limits stated in Section 5. Copies of mix designs and current production plant batch weights are not required to be included with the letter.

4. MATERIALS STRUCTURAL TESTING SECTION RESPONSIBILITES

4.1 Attachment #2, "P.C.C. Mix Design Submittal and Approval Process for Precast or Prestressed Concrete", provides the submittal and approval process for both new and previously used mix designs for precast or prestressed concrete. All mix designs will require approval for the intended use on a project. For previously used mix designs, this will include a check of the intended use as well as a review of the mix history in the CCR program.

4.2 Mix designs for precast or prestressed concrete must be prepared by or under the direction of, and signed by, an individual with one of the following qualifications:

(a) A registered professional engineer.

(b) A NICET (National Institute for Certification in Engineering Technologies) Level III or higher certified technician in the concrete subfield.

(c) A NRMCA (National Ready Mixed Concrete Association) Level 3 Certified Concrete Technologist.

(d) An ACI (American Concrete Institute) Certified Concrete Laboratory Testing Technician Level 2 or Grade II.

(e) A PCI (Precast/Prestressed Concrete Institute) Quality Control Technician/Inspector Level II or higher.

4.2.1 Individuals preparing and submitting mix designs for precast or prestressed concrete shall have experience in the development of such mix designs and mix design testing.

4.3 The following outlines the process that is to be followed for submittal and approval of P.C.C. mix designs for precast or prestressed concrete:

(1) The Materials Structural Testing Section receives the mix design submittal from the precast or prestressed manufacturer. For mix designs that have previously been used successfully on non-DOT projects within the past 24 months, the mix design submittal must include supporting test data meeting the requirements of Subsection 2.1.3 from an ADOT approved laboratory. For mix designs that have previously been approved, or used successfully, on ADOT projects within the past 24 months, it may be required that the mix design submittal include supporting data from an ADOT approved laboratory.

(2) If the Resident Engineer receives the mix design submittal from the prime contractor, the Resident Engineer sends a copy of the mix design submittal to the Materials Structural Testing Section.

(3) The Materials Structural Testing Section reviews the mix design submittal for accuracy and completeness. In addition, the Materials Structural Testing Section reviews mix history if available. The Materials Structural Testing Section will determine if a trial batch will be required in accordance with Attachment #2. When a trial batch is required, it must meet the requirements of Section 2. The mix design will be approved only after the receipt of all data, including the test results for compressive strength.

(4) The Materials Structural Testing Section will approve or disapprove the use of the mix design and notify the Resident Engineer within five working days of receiving all required information, including the trial batch results.

(5) The Materials Structural Testing Section enters approved mix designs into the CCR program as soon as possible.

5. MODIFICATION TO MIX DESIGNS AND PRODUCT CODES

5.1 Modifications that will not require a change in the product code:

5.1.1 Modifications which do not result in batch target weights for the fine aggregate or combined coarse aggregates changing by more than 5 percent from the approved mix design.

5.1.2 Modifications to the percentage of coarse aggregate fractions that do not change the total coarse aggregate volume.

5.1.3 Modifications to dosages of chemical or air-entraining admixtures, within the manufacturer's recommendations.

5.2 Modifications that may require a change in the product code or performance verification:

5.2.1 The incorporation or elimination of chemical admixtures which are listed on the mix design to effect a change in the time-of-set (retarders or accelerators).

5.2.2 Modification of the type, or the incorporation or elimination, of a chemical or air-entraining admixture.

5.2.3 Modification to the percentage of fly ash, natural pozzolan, or silica fume.

5.2.4 Modifications made in accordance with the provisions of Subsection 1.8.

5.3 Modifications that will require a change in the product code and may require performance verification:

5.3.1 Modification to the class of concrete per Table 1006-A of the Specifications.

5.3.2 Modification to the type/class of cement, fly ash, natural pozzolan, or silica fume.

5.3.3 Modification to a coarse aggregate size designation.

Bill Hurguy, P.E.
Assistant State Engineer
Materials Group

Attachments (4)

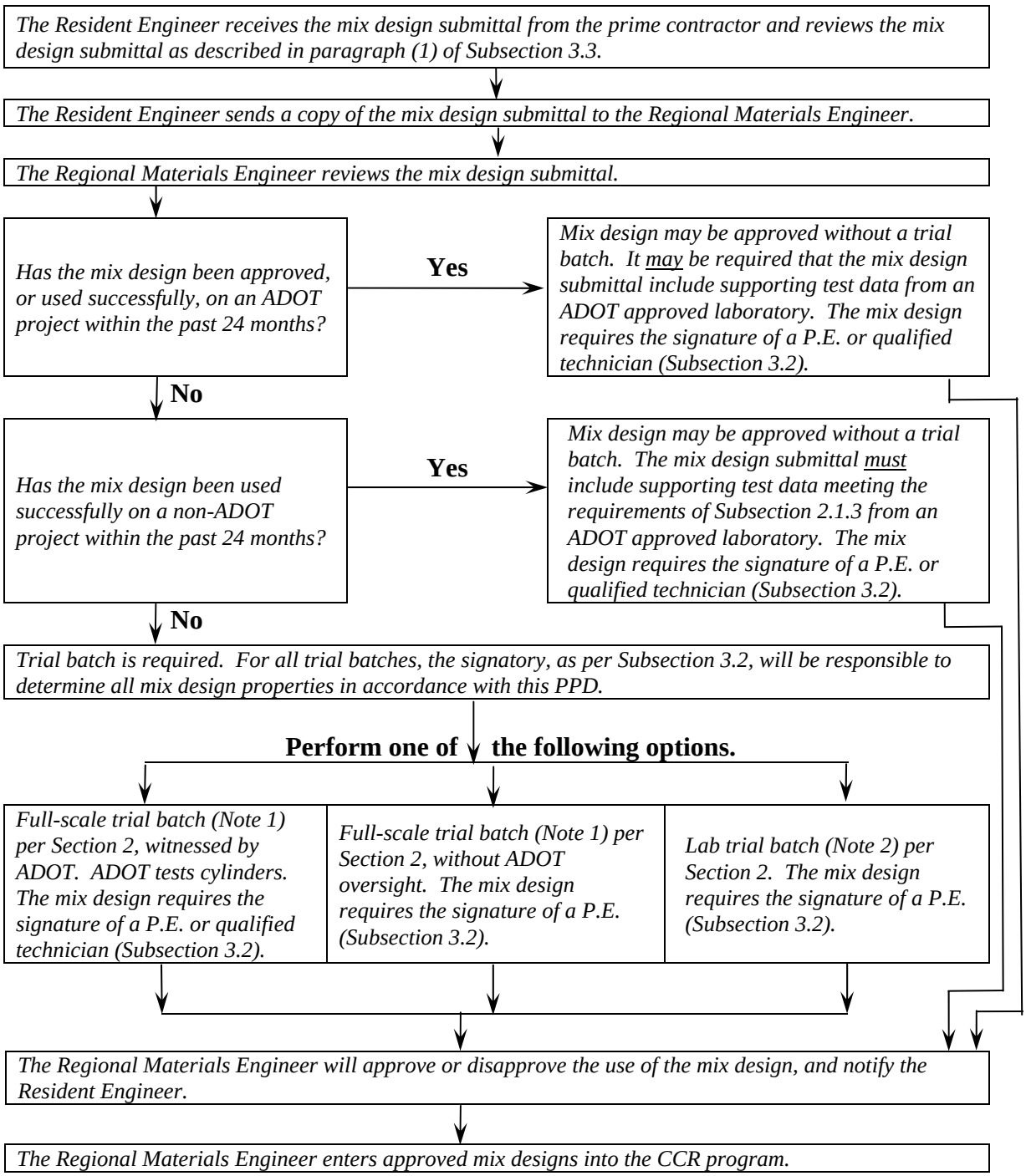

Note 1: The materials, mixing equipment, procedures, and size of batch shall be the same as that to be used in production.

Note 2: Proportionally reduced quantities of the materials that are to be used in production, mixed in a portable or laboratory concrete mixer.

PCC Mix Design Submittal and Approval Process for other than Precast or Prestressed Concrete

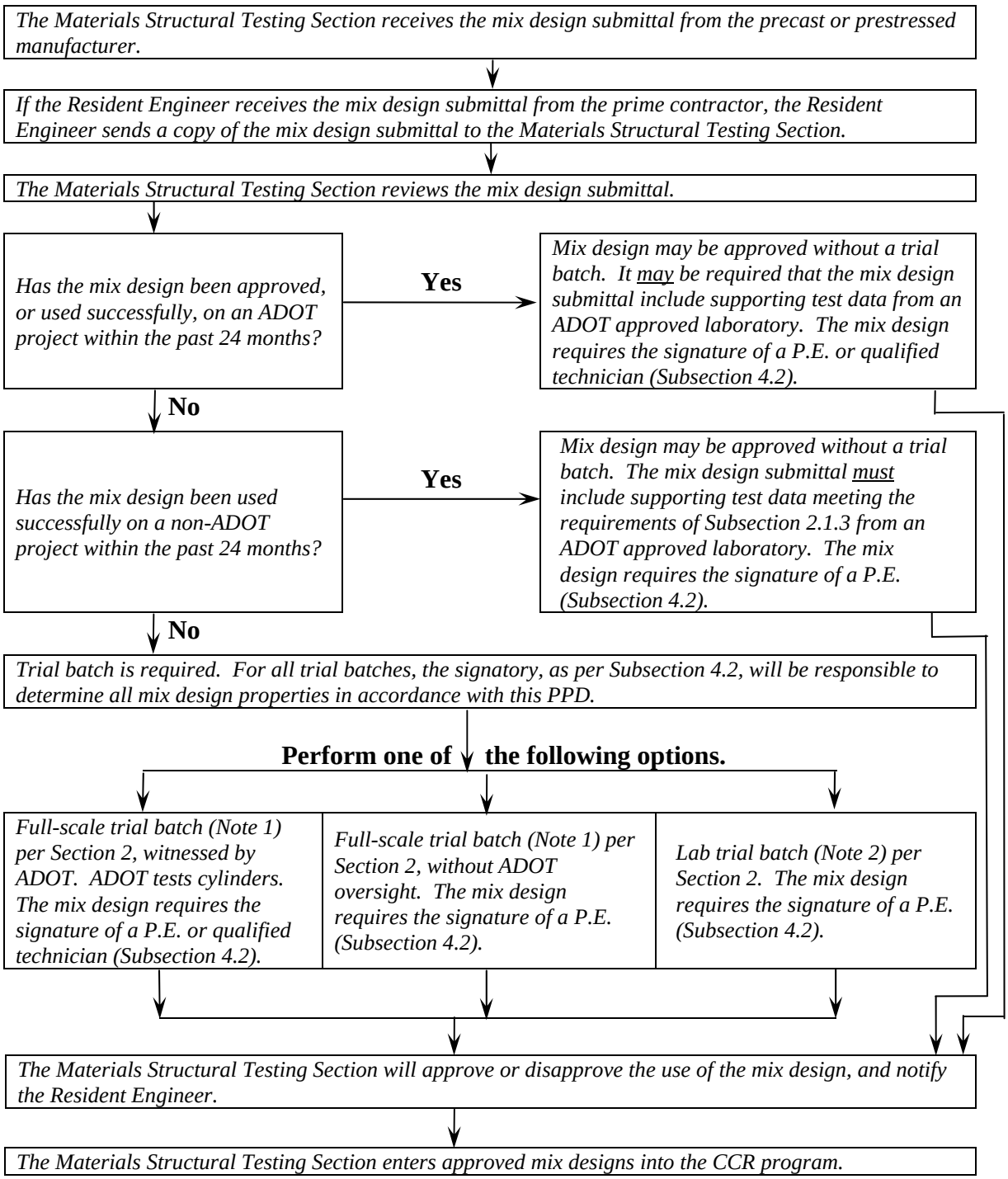

Note 1: The materials, mixing equipment, procedures, and size of batch shall be the same as that to be used in production.

Note 2: Proportionally reduced quantities of the materials that are to be used in production, mixed in a portable or laboratory concrete mixer.

P.C.C. Mix Design Submittal and Approval Process for Precast or Prestressed Concrete

XYZ Concrete Ready Mix

Product Code:	XYZ123456	Date: 12/11/08
Class and Strength:	ADOT CLASS S -- 4000 psi @ 28 Days	
Intended Use:	Caissons, Columns, Abutments	
Project Name:	Big Head – Small Feet	
Project Number:	F-099-99(9)	
TRACS Number:	H999901C	
Contractor:	ABC Contracting	
Ready Mix Plant:	XYZ Concrete Ready Mix - Dobson Plant #1	
Address:	999 E. Happy Days Drive Scottsbluff, AZ 99999	

		Weight per Cubic Yard	Specific Gravity	Volume
Cement		494 lbs	3.15	2.51 c.f.
Fly Ash		164 lbs	2.10	1.25 c.f.
Aggregate Ratios:				
50% 1" Coarse Aggregate	86%	1412 lbs (S.S.D.)	2.65	8.54 c.f.
8% 3/8" Coarse Aggregate	14%	226 lbs (S.S.D.)	2.65	1.37 c.f.
58% Total Coarse Aggregate (AASHTO Size No. 57)	100%			
42% Fine Aggregate		1186 lbs (S.S.D.)	2.65	7.17 c.f.
Allowable Water: 36 Gallons		300 lbs	1.00	4.81 c.f.
Total Weight per Cubic Yard:		3782 lbs		

Admixtures:

Pozzolith 220N	20 fl. oz. (3 oz./cwt of CM)	
Pozzolith NC 534	0 fl. oz. (AS NEEDED)	
5% Air - Micro Air (4 - 7%)	8 fl. oz. (1.25 oz/cwt of CM)	1.35 c.f.
	Total Volume:	27.00 c.f.

Slump: 4.0" +/- 1" W/CM Ratio: 0.46 Unit Weight: 140.1 pcf

Materials	Source - Type	
Cement	SRMG Type I/II/V low alkali, Clarkdale Plant	
Fly ash	SRMG Cholla Class F, Joseph City, AZ	
	SRMG Four Corners Class F, Fruitland, NM	
1" Coarse Aggregate	SRMG Dobson Facility, CM2218	
	SRMG Higley Pit, CM2055	
3/8" Coarse Aggregate	SRMG Dobson Facility, CM2218	
	SRMG Higley Pit, CM2055	
Fine Aggregate	SRMG Dobson Facility, CM2218	
	SRMG Higley Pit, CM2055	
Pozzolith 220N	BASF, C494 WRA Type A/B/D	(2 - 5 oz/cwt of CM -- AS NEEDED)
Pozzolith NC 534	BASF, C494 Accelerating Type C	(0 - 45 oz/cwt of CM -- AS NEEDED)
Micro Air	BASF, C260 Air Entrainment	(ADJUST AS NEEDED)

Mix Designed by: _____

Hank Concreteman, XYZ Ready Mix
Technical Services Manager
NRMCA Level 3 Certified Concrete Technologist

Example of a Typical P.C.C. Mix Design

PCC Mix Design Checklist

Project Name:	Supplier:
Project Number:	Product Code:
TRACS Number:	Class/Strength:
Contractor:	Date Received:

Requirement	Basis	Yes	No	N/A	Remarks
Project / TRACS Number	PPD #15				
Contractor	PPD #15				
Supplier Name	PPD #15				
Supplier Address	PPD #15				
Plant Designation	PPD #15				
Product Code	1006-3.02				
Concrete Class & Strength	1006-3.02				
Fine Aggregate Source (CM #)	1006-3.02				
Coarse Aggregate Source (CM #)	1006-3.02				
Coarse Aggregate Size No.	1006-3.02				
Cement Type	1006-3.02				
Cement Source	1006-3.02				
Class of Fly Ash	1006-2.04				
Fly Ash Source	1006-3.02				
Other Supp. Cementitious Mat'ls. Type	1006-2.04				
Other Supp. Cementitious Mat'ls. Source	1006-3.02				
Admixture Type	1006-3.02				
Admixture Source	1006-3.02				
Admixture Dose	1006-3.02				
Volumetrics (27.00 $\pm$ 0.05 Recommended)	1006-3.02				
W/CM Ratio	1006-3.02				
Slump Range	1006-3.02				
Air Range (4%-7% for 3000 feet and higher)	1006-3.01				
Intended Use	1006-3.02				
Signature of Qualified Mix Designer	1006-3.02				
Trial Batch / Mix History	PPD #15				

Notes:

12/09/2008

ARIZONA DEPARTMENT OF TRANSPORTATION * MATERIALS GROUP

1221 NORTH 21ST AVENUE PHOENIX, ARIZONA 85009-3740 PHONE (602) 712 - 7231

POLICY AND PROCEDURE DIRECTIVE

TO: ALL MANUAL HOLDERS	PPD NO. 16c
SUBJECT: ADOT RADIATION SAFETY PROGRAM	EFFECTIVE DATE: February 7, 2013

1. TABLE OF CONTENTS

SECTION #	TITLE	PAGE #
2	Terms and Definitions	1
3	General	5
4	Training	8
5	Personnel Monitoring Equipment	10
6	Public Dose	11
7	Embryo/Fetus	12
8	Radioactive Materials Inventories and Leak Testing	12
9	Audits	14
10	Radiation Survey Equipment	14
11	Posting and Labels	15
12	Operating Procedures	15
13	Emergency Procedures	17
14	Transportation and Transfer of Radioactive Sources	19
15	Storage Facilities	21
16	Maintenance, Repair and Calibration	23
17	Records	24
Attachments	Attachments #1 through #12	-

2. TERMS AND DEFINITIONS

2.1 AAC:

Arizona Administrative Code

2.2 ALARA (As Low As Reasonably Achievable):

Making every reasonable effort to maintain exposures to radiation as far below the regulatory dose limits as is practical, consistent with the purpose for which the licensed activity is undertaken, taking into account the state of technology, the economics of improvements in relation to benefits to the public health and safety, and other societal and socioeconomic considerations, and in relation to the utilization of licensed materials in the public interest.

2.3 ARRA:

Arizona Radiation Regulatory Agency

2.4 ATTI:

Arizona Technical Testing Institute

2.5 Authorized User:

Employees who use, or supervise others who use radioactive material. Authorized users are qualified, by training and experience, to assure radioactive material is used for its intended purpose in a manner that protects health and minimizes danger to life or property.

2.6 Background Radiation:

The ambient radiation fields to which humans are exposed daily, originating from cosmic rays, naturally-occurring radionuclides and human endeavors.

2.7 Contamination:

The deposition of radioactive material on accessible surfaces of structures, objects, equipment, or personnel.

2.8 Declared Pregnant Woman:

A woman who has voluntarily informed her employer, in writing, of her pregnancy and the estimated date of conception.

2.9 DRSO:

The Department Radiation Safety Officer is the person named on the radioactive material license who is responsible for compliance with license conditions and radiation safety regulatory requirements. The DRSO is responsible for administering the Department's Radiation Safety Program.

2.10 Extremity:

The hands, elbow, arm below the elbow, foot, knee, or leg below the knee.

2.11 IAEA:

International Atomic Energy Agency

2.12 IATA:

International Air Transport Association

2.13 May:

The word "may" is to be understood as permission, neither a requirement nor a recommendation.

2.14 Member of the Public:

Members of the public include persons who live, work, or may be near locations where portable gauges are used or stored. This includes employees whose assigned duties do not involve using or handling portable gauges or radioactive source

2.15 NRC:

Nuclear Regulatory Commission

2.16 Nuclear Gauge Containment System:

A safety containment box which is an enhanced field security system for nuclear gauges. The system when properly used helps prevent theft, damage, back injuries, misuse of equipment, improper or unauthorized access to equipment or other misguided actions.

2.17 NVLAP:

National Voluntary Laboratory Accreditation Program

2.18 Occupational Dose:

The dose received by an individual in a restricted area or in the course of employment in which the individual’s assigned duties involves exposure to radiation and to radioactive material from licensed or unlicensed sources of radiation.

2.19 Public Dose:

The dose received by a member of the public from exposure to radiation and to radioactive material released by the licensee, or to another source of radiation either within a licensee's controlled area or in unrestricted areas.

2.20 Radiation Area:

Any area, accessible to individuals, in which radiation levels could result in an individual receiving a dose equivalent in excess of five (5) millirem in one hour at thirty (30) centimeters [twelve (12) inches] from the radiation source or from any surface that the radiation penetrates.

2.21 Radioactive Material Storage Area:

A restricted area where radioactive materials are secured from unauthorized removal or access, or where control and constant surveillance over the materials is maintained.

2.22 Restricted Area:

Any area accessible to individuals whose access is limited by ADOT for the purpose of protecting individuals against undue risks from exposure to radiation and radioactive materials.

2.23 RRSO:

Regional Radiation Safety Officers who assist the DRSO in performing his/her responsibilities.

2.24 RSO:

A Radiation Safety Officer, either the Department Radiation Safety Officer (or designated alternate) or a Regional Radiation Safety Officer (or designated alternate).

2.25 Sealed Source:

Any device containing radioactive material that is permanently bonded, fixed, or encapsulated so as to prevent release and dispersal of the radioactive material under the most severe conditions which are likely to be encountered in normal use and handling.

2.26 Shall:

The word "shall" is to be understood as a requirement.

2.27 Should:

The word "should" is to be understood as a recommendation.

2.28 TLD:

Thermo Luminescent Dosimeter

2.29 Unrestricted Area:

Any area to which access is neither limited nor controlled by the licensee for purposes of controlling exposure to radiation. The licensee may control access to these areas for other purposes, such as security. Unrestricted areas may include offices, shops, laboratories, and areas outside buildings.

3. GENERAL

3.1 This Policy and Procedure Directive was developed to ensure compliance with the provisions of the Department's Radioactive Materials License, issued by the Arizona Radiation Regulatory Agency (ARRA) as license number 7-31, in conformance with Title 12, Chapter 1, of the Arizona Administrative Code (AAC).

3.1.1 In the event of conflict, state or federal regulation and license conditions shall take precedence over any statements in this directive.

3.1.2 Any questions on the interpretation of the requirements should be directed to the Department Radiation Safety Officer or a Regional Radiation Safety Officer.

3.2 A copy of the ARRA radioactive material license shall be kept on file and a notice shall be posted stating where employees can view copies of the regulations and the license. The original license application, all letters and information submitted along with the license application or in response to licensing agency information request, and all amendments to the license shall be maintained with the license.

3.2.1 License renewals shall be submitted at least thirty (30) days prior to the expiration date to ensure “timely renewal” status will be granted.

3.2.2 License amendment requests shall be submitted whenever any change is contemplated which could affect the license or any information contained in the original application or letters referenced in the license changes, e.g., facilities, equipment, procedures, or personnel.

3.2.3 Before using a nuclear gauge in another state, ensure that reciprocal license recognition (“reciprocity”) has been requested and received from the appropriate licensing agency for that state.

3.3 The Department Radiation Safety Officer (DRSO) is the person named on the radioactive material license who is responsible for compliance with license conditions and radiation safety regulatory requirements. The DRSO is responsible for administering the Department's Radiation Safety Program. The Regional Radiation Safety Officer (RRSO) assists the DRSO in performing this responsibility. The duties and responsibilities of the DRSO are shown below.

3.3.1 Ensure the license is maintained current and amendment/renewal requests are submitted in a timely manner. Make certain radioactive materials possessed and used by the Department conform to the terms and conditions of the ARRA license No. 7-31 and applicable regulations of the AAC Title 12, Chapter 1 concerning radioactive materials.

3.3.2 Ensure all authorized users are properly trained, have read and understand the licensee's (ADOT) emergency, operating, and radiation safety procedures. Train individuals to use nuclear gauges as described in the ADOT Radiation Safety Training Course.

3.3.3 Maintain records listing those individuals who have received the approved training and are qualified to use or supervise the use of nuclear gauges.

3.3.4 Ensure the sealed sources are leak tested in a timely manner and as prescribed in applicable instructions.

3.3.5 Ensure radioactive materials are used only by individuals who are authorized by the license and these individuals wear required personnel monitoring devices required by ARRA and/or ADOT regulations.

3.3.6 Ensure the ADOT Radiation Safety Program content and implementation is reviewed, at intervals not exceeding twelve (12) months, for compliance with ARRA rules, requirements, and license conditions.

3.3.7 Ensure all aspects of the ADOT Radiation Safety Program are being adhered to.

3.3.8 Ensure the safe usage of radioactive materials.

3.3.9 Maintain all records required by the license and applicable regulations, including personnel monitoring records, leak test records, inventory records, training records for authorized users, and receipt, transfer, and disposal records.

3.3.10 Serve as a point of contact and give assistance in case of emergency and to ensure that proper authorities are promptly notified in case of accident or damage to gauges.

3.3.11 Perform an annual audit of the radiation safety program at all locations statewide and ensure corrective actions are taken as needed.

3.3.12 Perform the duties and responsibilities as outlined and included herein.

3.4 The Arizona Department of Transportation management is committed to the ALARA philosophy of maintaining occupational and public radiation doses **A**s **L**ow **A**s **R**easonably **A**chievable. All personnel using nuclear gauges will be made aware of this commitment and will be instructed in the procedures for keeping all exposures ALARA.

3.4.1 Management has delegated authority to the Department Radiation Safety Officer (DRSO) to ensure adherence to ALARA principles and will provide all necessary and reasonable resources to implement this policy.

3.5 Radioactive material shall be used only by individuals who have satisfied the following requirements. The requirements are based on authorized user classification.

3.5.1 All employees shall adhere to the requirements of all applicable regulations, license conditions, and this directive. All employees shall conduct activities and operations in a manner consistent with ALARA principles. All employees shall notify an RSO immediately of the loss or theft of radioactive material or an incident involving radioactive contamination, leaking sources, unmonitored exposure to radiation, or other hazardous condition involving radioactive materials.

3.5.2 Class 1: The individual is a full time employee of the Department.

3.5.2.1 The individual is required to take and successfully complete the Department's Radiation Safety Training Course.

3.5.2.2 In addition to the requirements of Subsection 3.5.2.1, individuals operating nuclear gauges must have a current and appropriate ATTI certification. ("Field Technician" certification for field gauges or "Asphalt Technician" certification for laboratory asphalt content gauges.)

3.5.3 Class 2: The individual is a part time, seasonal, temporary, or contracted employee and has never completed an approved radiation safety training course.

3.5.3.1 The individual is required to take and successfully complete the Department's Radiation Safety Training Course.

3.5.3.2 In addition to the requirements of Subsection 3.5.3.1, individuals operating nuclear gauges must have a current and appropriate ATTI certification. ("Field Technician" certification for field gauges or "Asphalt Technician" certification for laboratory asphalt content gauges.)

3.5.4 Class 3: The individual is a part time, seasonal, temporary, or contracted employee and has completed an approved radiation safety training course.

3.5.4.1 The individual shall provide a certificate stating the completion of an approved radiation safety training course. The individual shall take and obtain a passing score on the Department's Radiation Safety Training Course exam.

3.5.4.2 In addition to the requirements of Subsection 3.5.4.1, individuals operating nuclear gauges must have a current and appropriate ATTI certification. ("Field Technician" certification for field gauges or "Asphalt Technician" certification for laboratory asphalt content gauges.)

4. TRAINING

4.1 Employees (including contracted technicians) handling and/or transporting Department nuclear gauges must take and successfully complete the ADOT Radiation Safety Training Course at least every twenty-four (24) months. Employees without current and appropriate ATTI certification and proper training and instruction on the use of the nuclear equipment may transport but shall not operate nuclear gauges.

4.1.1 "Appropriate ATTI certification", as used in Subsections 4.1 through 4.4, is defined as "Field Technician" certification for field gauges or "Asphalt Technician" certification for laboratory asphalt content gauges.

4.2 Employees (including contracted technicians) may utilize “hands on” training on the handling, transport, use, and operation of Department nuclear gauges after the successful completion of the ADOT Radiation Safety Training Course and under the supervision of an authorized user. These individuals shall not operate a nuclear gauge without supervision from an authorized user until they receive appropriate ATTI certification or DRSO approval.

4.3 Employees (including contracted technicians) must successfully complete the ADOT Radiation Safety Training Course within the last twenty-four (24) months in addition to possessing the appropriate ATTI certification before they are authorized to operate Department nuclear gauges. This employee will also be authorized to handle and transport Department nuclear gauges.

4.4 A new employee (including contracted technicians) who has completed an approved radiation safety training course prior to ADOT employment shall provide a certificate stating successful completion of the course. Additionally the employee shall take and obtain a passing score on the ADOT Radiation Safety Training Course exam and have the appropriate ATTI certification before authorization is granted to operate Department nuclear gauges. This employee will also be authorized to handle and transport and operate Department nuclear gauges.

4.5 In addition, all new employees (including contracted technicians) who may potentially use Department nuclear equipment shall be instructed in the requirements of the ADOT Radiation Safety Program as contained in this directive and the radiation safety procedures which must be observed in performing assigned duties.

4.6 All employees involved with packaging, preparing shipping papers, or transporting Department nuclear gauges shall receive refresher hazmat training at least every three (3) years (per US DOT regulations) if gauges are shipped only by highway. The training must be received every two (2) years (per IATA regulation) if gauges are shipped by air.

4.7 Documentation of all training shall include the employee's name, Employee Identification Number (EIN) or Social Security Number, description of training, date trained, employee's signature, and instructor's name.

4.8 DRSO Responsibilities

4.8.1 The DRSO shall be responsible for training individuals in the Department's radiation safety and emergency procedures, and in the use of the Department's nuclear gauges. Training shall be given by the DSRO or his/her designated representative.

4.8.2 The DRSO shall maintain records listing those employees who have received the required training and are authorized to handle and transport nuclear gauges. The DRSO will also maintain records listing those employees who have the required certification and training to handle, transport, and operate nuclear gauges. The DRSO will provide the RRSOs with a copy of these records.

4.9 RRSO Responsibilities

4.9.1 The RRSO shall serve as a point of contact and give assistance to individuals transporting or using radioactive materials within their Region.

4.9.2 The RRSO shall be responsible for coordinating with the DRSO regarding the training needs of individuals within their Region.

4.10 RSO Requirements

4.10.1 The individual RSOs shall have completed an approved nuclear gauge training course.

4.10.2 The individual RSOs shall have completed an approved 8-hour radiation safety officer training course.

5. PERSONNEL MONITORING EQUIPMENT

5.1 Occupational dose shall be monitored and controlled to maintain exposure as far below the applicable annual regulatory dose limits shown below as practical:

- Whole body deep dose 5 rem
- Skin dose 50 rem
- Extremity dose 50 rem
- Lens of the eye dose 15 rem

5.2 Each authorized user working in a restricted area or handling nuclear gauges shall be assigned a whole-body radiation monitoring device or TLD (**T**hermo **L**uminescent **D**osimeter) capable of measuring gamma and neutron radiation.

5.2.1 As a condition of being eligible for gauge assignment, all individuals assigned a TLD will be held responsible for actively participating in the Radiation Safety Program, including wearing the TLD assigned to them and returning the TLD to the RRSO when it is due.

5.3 All individuals transporting or using radioactive materials must be on the authorized user list prior to receiving a TLD.

5.4 All individuals performing maintenance, repair or calibration of radioactive devices must wear the TLD assigned to them.

5.5 The assigned TLD shall be worn at all times while working with or around nuclear gauges. TLDs are assigned to specific individuals and shall not be used by any other employee.

5.6 The TLD shall be worn on the upper torso. Ideally, the TLD should be worn on the chest area.

5.7 When the TLD is not being worn, it shall be stored in a relatively radiation-free location.

5.8 DRSO Responsibilities

5.8.1 The DRSO is responsible for arranging, through ADOT Procurement, a vendor to provide personnel monitoring equipment (TLDs) and services.

5.8.2 The DRSO shall coordinate with the vendor regarding all ordering, cancellation, and distribution of TLDs to each Region.

5.8.3 TLDs shall be processed and read at least quarterly by a NVLAP (National Voluntary Laboratory Accreditation Program) accredited processor.

5.8.4 The DRSO shall review all personnel monitoring equipment (TLD) reports to determine compliance with regulatory occupational exposure limits and to confirm personnel

exposures are ALARA. The DRSO shall alert the radiation worker in the event of a high or unusual exposure and notify the ARRA of any high or unusual exposure incidents. The DRSO shall initiate a review of the safety procedures with regards to the employee's work, investigate all such exposures, and take any corrective action required to prevent other such occurrences.

5.8.5 The DRSO shall maintain a record for each employee of their periodic and cumulative exposure levels.

5.8.6 Employees shall be kept informed of their radiation exposure monitoring results.

5.8.7 Upon written request, former employees are entitled to receive a report of the radiation exposure received during their employment. Immediately forward such requests to the DRSO for response.

5.9 RRSO Responsibilities

5.9.1 The RRSO shall be responsible for the distribution of TLDs within their respective Regions.

5.9.2 The RRSO shall make all requests for additions or deletions of TLDs with the DRSO.

5.9.3 The RRSO shall be responsible for complying with the vendor's instructions regarding storage, inventory, completion of the packing list, and return of TLDs to the vendor.

5.9.4 The RRSO shall review and forward a copy of TLD documentation to the DRSO.

5.9.5 The RRSO shall serve as a point of contact and give assistance to employees handling, transporting, or using nuclear gauges within their Region.

5.9.6 The RRSO shall be responsible for coordinating with the DRSO regarding the training needs of employees within their Region.

6. PUBLIC DOSE

6.1 Dose to members of the public from the use, transport, or storage of all licensed radioactive material shall be kept below one hundred (100) millirem in any one (1) year and less than two (2) millirem in any one (1) hour in any unrestricted area.

6.2 The DRSO shall maintain documentation demonstrating by calculation, measurement, or a combination of both that aforementioned limits are met. See Attachment #6 for further guidance.

6.3 After making changes affecting the gauge storage area (e.g., changing the location of gauges within the area, removing shielding, adding gauges, changing the occupancy of adjacent areas, moving the storage area to a new location), reevaluate compliance with public dose limits and ensure proper security of gauges. The DRSO shall maintain documentation of these changes and reevaluations.

7. EMBRYO/FETUS

7.1 Dose to an embryo/fetus of a declared pregnant woman shall not exceed five hundred (500) millirems during the entire pregnancy. If a woman does not declare pregnancy, she will be subject to the normal occupational exposure limits.

7.2 Employees should notify supervision upon becoming pregnant, however, declaration of pregnancy is voluntary and implies a willingness to abide by lower dose limits for the protection of the embryo/fetus and accept possible temporary changes in work schedules, location, or assignments.

7.3 All declarations of pregnancy shall be made in writing to the DRSO and shall include the estimated date of conception. The form for declaring pregnancy is contained in Attachment #8. A doctor's statement is not required. A woman may withdraw a declaration of pregnancy at any time by providing written notice.

7.4 Upon declaration of pregnancy, an evaluation shall be performed to determine the potential for the employee to exceed the regulatory exposure limit during the nine month gestation period. If the potential for exposure in excess of the dose limits exists, the employee may be transferred to a different job assignment.

7.5 Declared pregnant women with the potential to exceed fifty (50) millirem during the course of pregnancy shall be assigned a TLD.

7.6 If the dose to an embryo/fetus is found to have exceeded four hundred fifty (450) millirem by the time the woman declares the pregnancy, additional dose to the embryo/fetus shall not exceed fifty (50) millirem during the remainder of the pregnancy.

8. RADIOACTIVE MATERIALS INVENTORIES AND LEAK TESTING

8.1 A physical inventory and leak test of all licensed radioactive material shall be conducted by the Standardization Unit (Annex) staff at least semi-annually.

8.1.1 A physical inventory of all licensed radioactive materials in each Region shall be conducted by the respective RRSO, or their designated alternate, in March and September. This physical inventory will be documented on the "Semi-Annual Nuclear Gauge Inventory" form (Attachment #12) and a copy forwarded to the DRSO as soon after the conclusion of the inventory as possible.

8.2 Individuals performing inventories and leak tests of radioactive devices shall wear the TLD assigned to them.

8.2.1 Individuals shall perform leak testing in accordance with the leak test kit provider's instructions.

8.3 The inventory records shall include the following information:

- Make, model, state identification number (if applicable), and serial number of each gauge
- Serial number, radionuclide, and activity of each sealed source
- The physical location of each gauge
- The date the inventory was conducted
- The signature of the person conducting the inventory

8.4 DRSO Responsibilities

8.4.1 The DRSO shall be responsible for coordinating physical inventories. The "Six-Month Leak Test / Inventory Report" form can be found in Attachment #10.

8.4.2 As needed, the DRSO shall send the RRSO a packet containing instructions and leak test kits for radioactive sources within their Region.

8.4.3 The DRSO shall be responsible to have the completed leak test packets analyzed by Arizona State University.

8.4.4 The DRSO shall maintain records of physical inventories and leak testing for a minimum of five (5) years.

8.5 RRSO Responsibilities

8.5.1 The RRSO shall assist the DRSO in performing physical inventories and leak testing within their Region.

8.5.1.1 Upon receipt of the leak test packet and instructions, the RRSO or their designated alternate shall perform the physical inventory and leak test for all radioactive materials within their Region or specific sources as identified by the DRSO.

8.5.1.2 The RRSO shall return the completed leak test(s) to the DRSO on or before the deadline indicated in the instructions received with the test packet(s).

9. AUDITS

9.1 An audit of the content and implementation of the radiation safety program shall be performed annually.

9.1.1 The audit shall be performed by the DRSO or other individual designated by the DRSO. The "ADOT Radiation Safety Program Audit Checklist" may be found in Attachment #7.

9.2 Problems identified by the audit shall be corrected in a timely manner.

10. RADIATION SURVEY EQUIPMENT

10.1 All radiation detection instruments (survey meters) used for purposes of demonstrating compliance with regulatory requirements shall be calibrated at least annually by an organization licensed by the NRC or an Agreement State to perform such calibrations.

10.1.1 The DRSO shall coordinate the scheduling for calibration of survey meters with each RRSO.

10.1.2 The DRSO shall maintain a record of survey meter calibrations. A copy of the calibration shall accompany each survey meter upon its return to the respective RRSO.

10.2 Each RRSO shall be assigned a survey meter (Geiger counter).

10.3 The following checks shall be performed on each survey meter prior to its use:

- Battery check
- Calibration date check
- Response check using a gauge or check source

11. POSTING AND LABELING

11.1 Each area in which nuclear gauges are used or stored shall be posted with a sign bearing the radiation symbol and the words "Caution – Radioactive Materials" similar to Attachment #2. (Posting legends and background must meet NRC specifications.)

11.2 Each area in which nuclear gauges are used or stored shall be posted with a "Title 12, License No. 7.31, Notice Form" similar to Attachment #3, and a copy of the most current "Emergency Contact List" similar to the format of Attachment #4.

11.3 Posting of caution signs is not required in areas or rooms containing radioactive materials for periods of less than eight (8) hours if the materials are under constant surveillance and control.

12. OPERATING PROCEDURES

12.1 Radiation Safety Officers shall perform periodic field inspections to ensure only authorized individuals transport or use field nuclear gauges or laboratory nuclear gauges, they are on the authorized user list, and they wear the personnel monitoring device (TLD) assigned to them. Nuclear gauge operators failing to follow all provisions of this policy may be removed from the listing of authorized users and may be subject to ADOT's Progressive Discipline Policy.

12.2 The operator of the field nuclear gauge shall maintain surveillance and control over the gauge at all times when removed from the nuclear gauge containment system (see illustrations below). At job sites, the employee shall not walk away from the gauge when it is left on the ground. The operator must take action necessary to protect the gauge from danger of moving construction equipment.

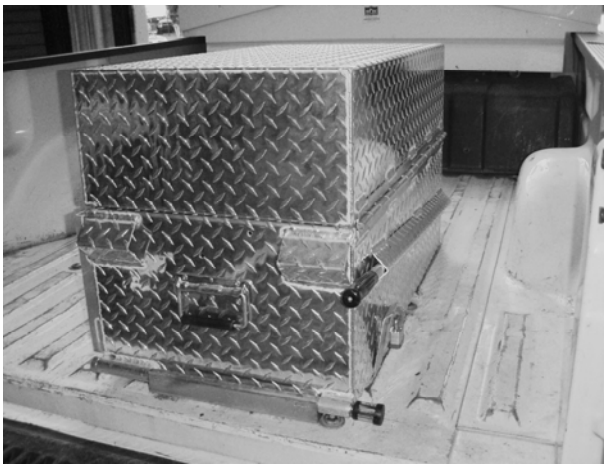

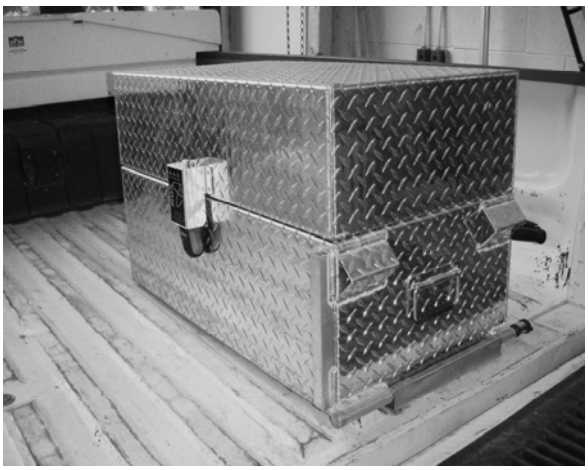

Nuclear Gauge Containment System

12.3 All employees shall wear a TLD when handling or using a nuclear gauge. Employees shall not wear another person's TLD and shall not store the TLD with or near the gauge. If the TLD is lost or damaged, the RSO must be notified immediately.

12.4 When a field nuclear gauge is not in use, the handle shall be locked in the shielded position (radioactive source shielded) and the gauge placed, secured, and locked in its nuclear gauge containment system, which is secured and locked to the bed of a pick-up truck. No radiation labels shall be applied to the outside of the nuclear gauge containment system. When the gauge is not in use at a temporary job site, and with prior approval by an RSO, it may be stored and secured in the locked trunk of a car, stored and secured in a van, or stored and secured in a locked storage shed. (All storage locations shall meet two levels of security criteria. See Subsection 15.5)

12.5 Before removing a gauge from its place of storage, ensure it is in the fully shielded position and the source rod is locked. Place the gauge in the transport case (if applicable) and lock the case.

12.6 Complete the "Radioactive Materials Unit Transportation/Transfer Receipt Form", Attachment #11, whenever a gauge is checked out to be transported for use at a temporary job site or returned to storage.

12.7 Use the gauge according to the manufacturer's instructions and recommendations.

12.8 Return the gauge to its proper locked storage location at the end of the work shift. The storage location shall meet the two independent physical controls criteria stated in Subsection 15.5.

12.9 Perform routine cleaning and maintenance according to the manufacturer's instructions and recommendations.

12.10 Individuals operating gauges shall practice the ALARA concept at all times and shall keep unauthorized individuals out of the operating area a minimum distance of fifteen (15) feet.

12.11 The operator shall never unnecessarily be exposed to, touch, or directly handle the unshielded source.

12.12 Unless absolutely necessary, do not look under the gauge when the source rod is being lowered into the ground. If you must look under the gauge to align the source rod with the hole, follow the manufacturer's procedures to minimize radiation exposure.

12.13 After completion of each measurement in which the source is unshielded, immediately return the source to the shielded position.

12.14 Individuals operating gauges shall keep the Department Radiation Safety Officer and Regional Radiation Safety Officer informed of the assigned storage location for each gauge. If a gauge is not returned to its assigned storage location at the end of the day, the DSRO and RRSO shall be notified of the location and provisions for storing the gauge.

12.15 In the event a gauge is lost or stolen, immediately notify an RSO.

13. EMERGENCY PROCEDURES

13.1 In the event of an accident:

13.1.1 Locate the gauge and/or source(s).

13.1.2 Immediately secure the area and keep all unauthorized personnel away from the nuclear source(s) until the situation is assessed and radiation levels are known. A radius of fifteen (15) feet will be sufficient. Do not leave the area unattended. However, perform first aid for any injured individuals and remove them from the area only when medically safe to do so.

13.1.3 Perform a visual inspection of the nuclear gauge to determine if the radioactive source housing and/or shielding has been damaged.

13.1.4 **PROCEDURE 1 -** If the gauge is damaged but is intact, and the source is obviously in place and not damaged (superficial damage, dented, dropped, minor damage):

13.1.4.1 Place the gauge in its transport case and return the gauge to its storage location. Contact the Regional Radiation Safety Officer (or their designated alternate) and/or the Department Radiation Safety Officer (or their designated alternate) and make arrangements for returning the gauge to the Materials Group Standardization Unit (Annex).

13.1.5 **PROCEDURE 2 -** If the gauge is severely damaged (fire, major run-over, torn apart), or is not in a condition to determine the source integrity:

13.1.5.1 Stop all access to and from the site. If a vehicle/equipment is involved, it must not be moved until the extent of the contamination, if any, of the vehicle/equipment and its operator is determined. Do not walk through the damage site. Quarantine a minimum fifteen (15) feet radius around the damage site. The operator shall attempt to prevent themselves and others from exposure.

13.1.5.2 Gauge users and other potentially contaminated individuals should not leave the scene until emergency assistance arrives.

13.1.5.3 At the earliest possible time, after the situation has been stabilized and is under control, contact the Regional Radiation Safety Officer (or their designated alternate) and/or the Department Radiation Safety Officer (or their designated alternate). Describe the present conditions and follow the instructions given.

13.1.5.4 The RSO shall arrange for a radiation survey to be conducted as soon as possible by a knowledgeable person using appropriate radiation detection instrumentation. The survey is to assess the integrity of the source encapsulation and shielding to determine the extent of contamination, if any, of personnel, equipment, facilities, or areas.

13.1.5.5 Notify the local authorities and regulatory agencies as required within the time frames specified by the regulations.

13.2 Notifications

13.2.1 The following occurrences must be reported to the ARRA authorities in accordance with the time frames and methods specified in the applicable regulations.

- Lost, stolen, or missing sources
- Events that cause, or threaten to cause, exposures to individuals in excess of regulatory limits
- Leaking or contaminated sealed sources

13.3 When initial reports are made by phone, written reports must be submitted within thirty (30) days.

13.4 In the event that a nuclear gauge is lost or stolen:

13.4.1 Immediately notify the Regional Radiation Safety Officer (or their designated alternate) and/or the Department Radiation Safety Officer (or their designated alternate).

13.5 Emergency Contacts

13.5.1 The Regional Radiation Safety Officer and/or the Department Radiation Safety Officer should be the first individuals contacted. In the event that they cannot be reached, their designated alternate should be contacted.

13.5.1.1 An example of the format for the “Emergency Contacts” list is given in Attachment #4. The list of emergency contacts shall be maintained to reflect current information.

13.5.2 The Department Radiation Safety Officer shall be the primary contact with the Arizona Radiation Regulatory Agency, and other local authorities, as appropriate in accordance with R12-1-445.

13.5.3 In the event that contact cannot be made with a Radiation Safety Officer or a designated alternate, the following should be contacted.

13.5.3.1 Arizona Radiation Regulatory Agency (602-255-4845).

13.5.3.2 Department of Public Safety, Watch Commander (602-223-2212).

14. TRANSPORTATION AND TRANSFER OF RADIOACTIVE SOURCES

14.1 Any individual transporting a nuclear gauge shall be on the authorized user list, and wear the personnel monitoring device (TLD) assigned to them, before being issued a gauge.

14.2 The “Radioactive Materials Unit Transportation/Transfer Receipt Form” (see Attachment #11) shall be completed prior to transporting a gauge. When transporting any radioactive source, the yellow copy (or photo copy) of the completed form shall be within arm's length of, and visible to, the driver in the front seat or cab of the vehicle.

14.2.1 The white and pink copies of the “Radioactive Materials Unit Transportation/Transfer Receipt Form” shall be distributed as indicated on the form.

14.3 All transfers require the signature of the DRSO or an RRSO, or an individual authorized by the DRSO to approve the transfer of gauges.

14.4 When transporting any radioactive source, a copy of this Materials Policy and Procedure Directive shall be within arm's length of, and visible to, the driver in the front seat or cab of the vehicle.

14.5 All possible means shall be provided to ensure that the nuclear gauge is as far away from the passenger compartment as possible. Transportation of nuclear gauges is to be in accordance with one of the following methods. No exceptions are allowed.

14.6 Follow all applicable requirements when transporting the gauge. See checklist in Attachment #5.

14.7 When transporting a field nuclear gauge, the handle shall be locked in the shielded position (radioactive source shielded), and the shutter (sliding block) fully closed. Place the gauge in the transport case and lock the case. Block and brace the gauge to prevent movement during transport and lock the gauge in or to the vehicle. This shall be achieved by placing the gauge in the locked transport case which is secured to the nuclear gauge containment system that is fastened to the transport vehicle. Ensure all mechanisms are in the locked position. No radiation labels shall be applied to the outside of the nuclear gauge containment system.

14.8 When transporting laboratory nuclear gauges, the gauge shall be locked in its approved transport case. The transport case containing the laboratory nuclear gauge shall be so blocked and braced in the transportation vehicle such that it cannot change position during conditions normally incident to transportation. The laboratory nuclear gauge shall never be unattended during transport.

14.9 Two levels of security shall be maintained at all times. Nuclear gauges shall be securely locked in the transportation vehicle as shown below.

14.9.1 Pick-up truck: In the extreme rear of the vehicle.

14.9.2 Sedan: In the trunk of the vehicle.

14.9.3 Van: In the rear of the vehicle as far from the occupants as possible.

14.9.4 Gauges shall not be transported in the passenger area of the vehicle.

14.9.5 The Department Radiation Safety Officer shall be contacted for approval of any other method of transportation utilized.

14.10 The DRSO shall maintain records that indicate the location of all Department gauges statewide.

14.11 The RRSO shall maintain records that indicate the location of all Department gauges currently being utilized within their Region. Following gauge transfers by an RRSO within their region, the DRSO shall be immediately notified via fax or email. A corresponding copy of the "Radioactive Materials Unit Transportation/Transfer Receipt Form" shall be promptly sent to the Materials Group Standardization Unit (Annex).

14.12 The DRSO may transfer gauges directly to construction offices. In such cases, the RRSO shall be notified.

14.13 The DRSO may transfer gauges to the RRSO for distribution to construction offices.

14.14 The RRSO may only transfer gauges to construction offices within their Region.

14.15 Gauges shall not be transferred from construction office to construction office.

14.16 Gauges not scheduled for use for extended periods [approximately ninety (90) days] shall be returned to the Materials Group Standardization Unit (Annex).

15. STORAGE FACILITIES

15.1 Nuclear gauges (field and laboratory) shall be properly secured against unauthorized removal at all times when they are not in use.

15.2 When not in use on the job site, each field nuclear gauge shall be stored at all times in its approved, locked transport case which is attached inside the locked nuclear gauge containment system (ensure all locking mechanisms are in the locked position).

15.3 A field nuclear gauge stored at a temporary job site away from Central or Regional storage facilities shall be stored as specified below:

15.3.1 If within a fenced-in or otherwise secured ADOT vehicle storage/parking area, a field nuclear gauge may be stored up to sixty-six (66) hours in the locked transport case which is attached inside the locked nuclear gauge containment system which is bolted to the bed of the truck with all locking mechanisms in the locked position.

15.3.1.1 When an operator is in travel status, overnight storage of the gauge must be pre-approved by the DRSO and/or RRSO. If either the DRSO or RRSO grants approval, the DRSO or respective RRSO shall be notified promptly.

15.3.2 If it is anticipated the storage will exceed sixty-six (66) hours, the gauge must be stored in a locked and fixed (non-portable) storage unit, or in a locked storage room, within a secured office, laboratory, warehouse, or storage building. The truck shall not be used on public roadways without removing the empty gauge containment system from the truck; or placing the gauge back in the containment system, with all locking mechanisms in the locked position (ensure vehicle operator is on the authorized user list).

15.3.3 Residential home storage of a gauge is prohibited.

15.4 Storage areas for all nuclear gauges shall be inspected and approved by the DRSO and/or RRSO prior to its use for actual storage.

15.5 The storage area shall be designed to prevent unauthorized access. A minimum of two independent physical controls that form tangible barriers shall be used to secure nuclear gauges from unauthorized removal or theft while in storage.

15.6 The storage area shall be located no closer than fifteen (15) feet from a permanent work station, such as a desk or work table.

15.7 The unrestricted area surrounding each storage unit throughout the state shall not exceed two (2) millirem/hr. 15.8 Storage areas shall be conspicuously posted with the following information:

15.8.1 ARRA-6 NOTICE TO EMPLOYEES. (An illustration is provided in Attachment #1.)

15.8.2 CAUTION-RADIOACTIVE MATERIALS. (An illustration is provided in Attachment #2.)

15.8.3 TITLE 12, LICENSE NO. 7-31, NOTICE FORM. (An illustration is provided in Attachment #3.)

15.8.4 EMERGENCY CONTACTS LIST. (A sample of the format for the "Emergency Contacts" list is provided in Attachment #4.)

15.9 DRSO Responsibilities

15.9.1 The DRSO shall be responsible for the main storage facility located at the Materials Group Standardization Unit (Annex).

15.9.2 The DRSO shall maintain records of permanent and temporary site locations.

15.9.3 The DRSO shall be responsible for notification to ARRA concerning new storage locations of radioactive materials.

15.9.4 The DRSO, or designated representative, shall inspect each storage facility annually for compliance with the Department's Radioactive Materials License. The DRSO shall maintain the annual inspection records.

15.10 RRSO Responsibilities

15.10.1 The RRSO shall inspect all permanent and temporary storage sites within their Region annually for compliance with the Department's Radioactive Materials License. The inspection results shall be recorded on the "Radiation Materials Inspection Report" form (see Attachment #9) and a copy shall be forwarded to the DRSO.

15.10.2 All newly designated storage sites in a Region shall be inspected by the RRSO before radioactive materials can be stored at the new location. A copy of the inspection report, along with a plan drawing of the facility and the storage area within the facility shall be promptly forwarded to the DRSO.

16. MAINTENANCE, REPAIR, AND CALIBRATION

16.1 Each nuclear gauge shall be calibrated at least every twelve (12) months. A record of gauge calibrations shall be maintained by the DRSO or his/her designated representative.

16.2 All maintenance, repair, and calibration of gauges shall be performed by personnel authorized by the DRSO.

16.3 Individuals performing the maintenance, repair, or calibration of radioactive devices must wear the TLD assigned to them.

16.4 Calibration of nuclear gauges shall be performed in accordance with the applicable standard test procedure.

16.5 To ensure that calibrations are performed at the prescribed interval; the DRSO shall utilize a system for tracking when calibrations need to be performed.

16.6 The DRSO shall coordinate the required scheduling for gauge calibration with each RRSO and/or gauge user.

16.7 If any malfunction in a gauge is detected, the DRSO shall be contacted immediately.

17. RECORDS

17.1 The following records and documents shall be maintained for at least the minimum time period specified in the license, or applicable NRC or Agreement State regulations, unless permanent retention is specified below. In the absence of a specific requirement, retain for at least five (5) years.

- Current license
- Current copies of the applicable state and federal regulations
- Instrument calibration records (retain permanently)
- Personnel exposure records (retain permanently)
- Evaluation of dose to members of the public
- Records of receipt of radioactive materials
- Physical inventory of radioactive material
- Records of transfer of shipment of radioactive materials
- Gauge utilization log
- Radiation safety training documentation (initial and refresher)
- Hazmat training documentation (initial and refresher)
- Radiation and contamination surveys (retain permanently)
- Leak test records
- Audits of the radiation safety program
- Copy of the IAEA Certificate of Competent Authority for each source
- Type A package testing results
- Shipping papers

Bill Hurguy, P.E.
Assistant State Engineer
Materials Group

Attachments (12)

ARRA-6 (2012) R

ARIZONA RADIATION REGULATORY AGENCY

NOTICE TO EMPLOYEES

**STANDARDS FOR PROTECTION AGAINST RADIATION;
NOTICES, INSTRUCTIONS AND REPORTS TO WORKERS;
INSPECTIONS**

In Articles 4 and 14 of the Arizona Radiation Regulatory Agency (ARRA) rules for the Control of Radiation, the Arizona Radiation Regulatory Agency has established standards for your protection against radiation hazards. In Article 10 of the rules for the Control of Radiation, the Arizona Radiation Regulatory Agency has established certain provisions for the options of workers engaged in work under an ARRA license or registration.

YOUR EMPLOYER'S RESPONSIBILITY

Your employer is required to –

1. Apply these rules to work involving sources of radiation.
2. Post or otherwise make available to you a copy of the Arizona Radiation Regulatory Agency rules, licenses, and operating procedures which apply to work you are engaged in, and explain their provisions to you.
3. Post notice of violation involving radiological working conditions, proposed imposition of civil penalties, and orders.

YOUR RESPONSIBILITY AS A WORKER

You should familiarize yourself with those provisions of the Arizona Radiation Regulatory Agency rules and the operating procedures which apply to the work you are engaged in. You should observe their provisions for your own protections and protection of your co-workers.

WHAT IS COVERED BY THESE RULES

1. Limits on exposure to radiation and radioactive material in restricted and unrestricted areas;
2. Measures to be taken after accidental exposure;
3. Personnel monitoring, surveys, and equipment;
4. Caution signs, labels, and safety interlock equipment;
5. Exposure records and reports;
6. Options for workers regarding ARRA inspections; and
7. Related matters.

REPORTS ON YOUR RADIATION EXPOSURE HISTORY

1. The Arizona Radiation Regulatory Agency rules require that your employer give you a written report if you receive an exposure in excess of any applicable limit set forth in the rules or in the license. The basic limits for exposure to employees are set forth in Articles 4 and 14 of the Rules. These sections specify limits on exposure to radiation and exposure to concentrations of radioactive material in air and water.

2. If you work where personnel monitoring is required, and if you request information on your radiation exposures,
   (a) Your employer must give you a written report, upon termination of your employment, of your radiation exposures, and
   (b) Your employer must advise you annually of your exposure to radiation.

INSPECTIONS

All licensed or registered activities are subject to inspection by representatives of the Arizona Radiation Regulatory Agency. In addition, any worker or representative of workers who believes that there is a violation of the regulations issued thereunder, or the terms of the employer's license or rules with regard to radiological working conditions in which the worker is engaged, may request an inspection by sending a notice of the alleged violation to the Arizona Radiation Regulatory Agency. The request must set forth the specific grounds for the notice, and must be signed by the worker as a representative of the workers. During inspections, ARRA inspectors may confer privately with workers, and any worker may bring to the attention of the inspectors any past or present condition which he believes contributed to or caused any violation as described above.

INQUIRIES

Inquiries dealing with the matters outlined above can be sent to the:

**ARIZONA RADIATION REGULATORY AGENCY
4814 South 40th Street, Phoenix, Arizona 85040
(Office (602) 255-4845, Fax (602) 437-0705)
WWW.AZRRA.GOV**

POSTING REQUIREMENT

IN ACCORDANCE WITH A.A.C. R12-1-1002, COPIES OF THIS NOTICE SHALL BE POSTED IN SUCH A MANNER TO PERMIT EMPLOYEES WORKING IN OR FREQUENTING ANY PORTION OF A RESTRICTED AREA, USED FOR ACTIVITIES LICENSED OR REGISTERED PURSUANT TO ARTICLE 2 OR ARTICLE 3, OF THE AGENCY'S RULES, TO OBSERVE A COPY OR COPIES ON THE WAY TO OR FROM THEIR WORK AREA.

NOTICE: ---------- PURSUANT TO R12-1-1002 B. ARIZONA ADMINISTRATIVE CODE, THE FOLLOWING DOCUMENT(S) REGARDING REGULATED USES OF RADIATION ARE LOCATED AS INDICATED AND ARE AVAILABLE DURING NORMAL DUTY HOURS.

License and/or Registration, any "Notice of Violation", or order issued by the ARRA : ORCBS or www.orcbs.arizona.edu Regulations relating to use : ORCBS or www.azrra.gov

Operating or Use Procedure : Contact Approval Holder/Approval Safety Coordinator Certified : Daniel Silvain, M.S., DABR., Radiation Safety Officer Date : September 24, 2012

(Red or magenta legend on yellow background)

ADOT
Intermodal Transportation

Janice K. Brewer, Governor
John S. Halikowski, Director
Jennifer Toth, State Engineer
Robert Samour, Senior Deputy State Engineer, Operations
Dallas Hammit, Senior Deputy State Engineer, Development

- NOTICE -

ARTICLES 4 AND **10** OF THE STATE OF ARIZONA, OFFICIAL COMPILATION OF ADMINISTRATIVE RULES AND REGULATIONS, TITLE 12; THE RADIOACTIVE MATERIALS LICENSE (NO. 7-31); AND RELATED CORRESPONDENCE; ARE ON FILE AT THE MATERIALS GROUP QUALITY ASSURANCE SECTION AND AT EACH MATERIALS GROUP REGIONAL LABORATORY.

EMERGENCY CONTACTS

The Regional Radiation Safety Officer and/or the Department Radiation Safety Officer should be the first person(s) contacted. In the event they cannot be reached, their designated Alternates should be contacted.

EMERGENCY CONTACT PERSONNEL				
RADIATION SAFETY OFFICER (RSO)	TITLE	LOCATION	WORK #	HOME/CELL#
CRAIG WILSON	DEPARTMENT RSO	MATERIALS CENTRAL LAB	602-712-7974	602-448-1549
ROBERT COBLE	ALTERNATE DEPARTMENT RSO	MATERIALS CENTRAL LAB	602-712-7741	623-826-5791
LIBRADO RAMIREZ	ALTERNATE DEPARTMENT RSO	MATERIALS CENTRAL LAB	602-712-7742	602-525-2700
SHANE LITTLE	REGIONAL RSO	PHOENIX REGIONAL LAB	602-712-6735	623-521-3013
JEREMY BARNES	ALTERNATE REGIONAL RSO	PHOENIX REGIONAL LAB	602-712-6575	602-390-6499
ABRAHAM MENDOZA	REGIONAL RSO	TUCSON REGIONAL LAB	520-388-4274	520-409-6215
MARIO CASTILLO	ALTERNATE REGIONAL RSO	TUCSON REGIONAL LAB	520-388-4270	520-820-1122
MARK HANNO	REGIONAL RSO	PRESCOTT REGIONAL LAB	928-777-5894	928-533-9083
PAUL BERRY	ALTERNATE REGIONAL RSO	PRESCOTT REGIONAL LAB	928-777-5902	928-300-1128
JON ULIBARRI	REGIONAL RSO	FLAGSTAFF REGIONAL LAB	928-779-7537	928-606-0553
DWIGHT DAY	ALTERNATE REGIONAL RSO	FLAGSTAFF REGIONAL LAB	928-779-7537	928-525-9344

The Department Radiation Safety Officer shall be the primary contact with the Arizona Radiation Regulatory Agency, and other local authorities, as appropriate in accordance with R12-1-445.

In the event that a Radiation Safety Officer or an alternate cannot be contacted from the above list, contact:

Arizona Radiation Regulatory Agency 602-255-4845

Department of Public Safety
Watch Commander 602-233-2212

ADOT Radiation Safety Shipping Checklist

Gauge Model _____ Serial Number _____

PACKAGE INSPECTION:

_____ Gauge locked in safety position
_____ Shipping case in unimpaired physical condition except for superficial marks
_____ Tamper-evident security seal applied to shipping case

PACKAGE MARKING AND LABELS:

_____ Proper shipping name (with RQ designation, if applicable)
_____ Correct label type (Yellow II, White I)
_____ Correct nuclide(s), activities in SI units (i.e. GBq)
_____ Correct Transport Index (dose rate at 1 meter in millirem/hour)
_____ Type A package label
_____ Ship-to address matches label, bill of lading
_____ Cargo Aircraft Only Label (for air shipments)

SHIPPING PAPERS:

_____ Reportable quantity designation (RQ) if package contains Am-241
_____ Proper shipping name, UN ID, Hazard Class (e.g., Radioactive material, Type A package, Special form, UN3332, 7)
_____ Nuclide(s) and activities in SI units (i.e., GBq)
_____ Type A package specification
_____ Label specification (e.g., Yellow II, White I)
_____ Transport index (TI)
_____ Package dimensions (with unit of measure)
_____ Emergency contact telephone number listed
_____ Shipper's certification signed
_____ Emergency response information sheet attached
_____ IAEA Certificates listed and attached (for air shipments)

Checked by (Initials): _____ Date : _____

2/7/13

ADOT Public Dose Calculation Worksheet

To demonstrate compliance, this document must show the maximum dose to any *member of the public* will be less than 100 millirems in a year and the maximum dose in any *unrestricted area* will be less than 2 millirems in any one hour. The typical limiting case involves the storage of gauges. Several simplifying and conservative assumptions are made in this calculation method. More realistic assumptions can be made or actual measured dose rates can be used if necessary to demonstrate compliance.

- No shielding other than the shielding in the gauge is assumed to be present.
- All gauges are assumed to be at the same distance as the closest gauge.
- Sources are assumed to remain in the shielded position within the gauge.
- Each gauge is assumed to be a point source and dose rates are assumed to decrease with the inverse square of distance from the gauge.
- Gauges are assumed to be in storage all of the time.

Step	Instruction	Result
	DOSE TO MEMBER OF PUBLIC IN ONE YEAR	
1.	Identify the individual member of the public likely to receive the highest dose from gauges in storage. This will be the person who spends the most time in the vicinity of the stored gauges or who is closest to the gauges. This individual will be the focus of the calculation.	
2.	Determine the maximum dose rate in millirem/hr at a distance of three feet (1 meter) for each gauge kept in the storage location. This value may be obtained from the radiation profile in the gauge operation manual, from the manufacturer, or from Transport Index on the Yellow II label on the transport case. Calculate the sum of the dose rate values for all of the gauges that may be stored at this location and enter the result. Remember to include both gamma and neutron dose.	
3.	Enter the distance in feet from the position occupied by the person identified in step 1 to the nearest gauge in the storage area.	
4.	Calculate the square of the distance from step 3 and enter the result.	
5.	Divide the value from step 4 by 9 and enter the result. This is a factor which accounts for the difference between the dose rate at 3 feet and the dose rate at the distance at which the person is located.	
6.	Divide the dose rate (millirem/hr) from step 2 by the result from step 5 and enter the result.	
7.	Enter the number of hours in a year that the individual will be present in the vicinity of the gauges. For example, an individual working full-time near the gauges, would be present approximately 2000 hrs in a year (8 hrs per day x 5 days per week x 50 weeks per year).	
8.	Multiply the result from step 6 by the result from step 7 and enter the result. This is the maximum dose in millirem the individual could receive in one calendar year. If this value is less than 100 millirem, the annual dose limit is met; continue with step 9 to determine if the unrestricted area dose rate limit is met.	

	DOSE IN UNRESTRICTED AREAS IN ONE HOUR	
9.	Determine the minimum distance in feet to any unrestricted area outside the gauge storage area and record the value. This could be an area above, below, or adjacent to the storage area that is unrestricted for the purpose of radiation control. The area need not be occupied, just accessible to members of the public, which may include company employees.	
10.	Calculate the square of the distance from step 9 and enter the result.	
11.	Divide the value from step 10 by 9 and enter the result. This is a factor which accounts for the difference between the dose rate at 3 feet and the dose rate at the distance in step 9.	
12.	Divide the dose rate (millirem/hr) from step 2 by the result from step 11 and enter the result. This is the maximum dose in millirem that could be received in one hour in the closest unrestricted area. If this value is less than 2 millirem, the dose limit for unrestricted areas is met.	

Calculations performed by _____ Date _____

If either dose limit is exceeded, you should either recalculate that dose using more realistic assumptions and data or take steps to reduce the dose received by members of the public using the principles of time, distance, and shielding.

- Limit the time personnel spend in the vicinity of the gauges
- Increase the distance between the gauges and personnel
- Add shielding to reduce the dose rate

Occupancy Factors

The following occupancy data may be used when data for specific personnel are not available.

Area	Occupancy Factor (T)
Work areas such as offices, laboratories, shops, wards, nurses' stations; living quarters; children's play areas; and occupied space in nearby buildings.	Full Occupancy (T=1)
Corridors, rest rooms, elevators using operators, unattended parking lots.	Partial Occupancy (T=1/4)
Waiting rooms, toilets, stairways, unattended elevators, janitor's closets, outside areas used only for pedestrians or vehicular traffic.	Occasional Occupancy (T=1/16)

Reference: NCRP Report No. 49, Structural Shielding Design and Evaluation for Medical Use of X-Rays and Gamma Rays of Energies Up to 10 MeV, 1976

Shielding Half-Values*

Material	Cs-137 Gamma Radiation	AmBe Neutron Radiation
Lead	¼ in.	N/A
Concrete	2 in.	4 in.

*The half-value is the thickness of material that will reduce the dose rate by one-half.

ADOT Intermodal Transportation

ADOT RADIATION SAFETY PROGRAM AUDIT CHECKLIST

Licensee name _____ License No._____

Auditor's name (print) _____ Date of Audit _____

Auditor's signature _____

Audit Item	Yes	No	Comments
1. Audit History			
a. Last audit at this location (date)?			
b. Were previous audits conducted yearly?			
c. Were any deficiencies noted during the last two audits? Any deficiencies repeated?			
d. Were corrective actions taken?			
2. Organization and Scope of Program			
a. If the mailing address or place of use changed, was the license amended?			
b. If the RSO changed, was the license amended? Does the new RSO meet the training requirements?			
c. Does the license authorize all of the radionuclides in the gauges possessed?			
d. Are the actual uses of gauges consistent with the authorized uses on the license?			
e. Is the RSO fulfilling his/her duties?			
3. Training and Instructions to Workers			
a. Have all workers received initial radiation safety training? Refresher training?			
b. Have all workers received required Hazmat training? Refresher training?			
c. Are training records maintained for each individual?			
d. Did interviews/observations reveal gauge operators know emergency procedures? Leak testing procedures? Service procedures? Transportation procedures?			

4. Radiation Detection Instruments			
a. Is a survey meter available for radiation measurements? Frisker for contamination measurements?			
b. Have the instruments been calibrated within the last year?			
c. Are calibration records maintained?			
d. Are operation checks performed prior to use?			
5. Gauge Inventory			
a. Is a record kept showing receipt of each gauge?			
b. Are all gauges physically inventoried at least every six months?			
c. Are records of inventories maintained?			
6. Personnel Radiation Protection			
a. Are ALARA considerations incorporated into the radiation safety program?			
b. Are all personnel assigned TLD badges?			
c. Do all personnel wear their TLD badges in the restricted area and when handling gauges? Are badges properly stored when not in use?			
d. Are TLD badges exchanged at least quarterly and processed by a NVLAP accredited organization?			
e. Are dosimetry reports reviewed by the RSO when received?			
f. If a worker declared her pregnancy, were the applicable requirements met?			
g. Were radiation and contamination surveys in restricted and unrestricted areas performed quarterly?			
h. Are records of surveys maintained?			

Audit Item	Yes	No	Comments
7. Public Dose			
a. Are gauges used and stored in a manner to keep public doses below 100 millirem in a year?			
b. Has a survey or evaluation been performed to demonstrate public dose limits are met? (indicate the date)			
c. Have there been any changes in the use or storage of gauges or in the use of surrounding areas that would necessitate a new survey or evaluation?			
d. Are unrestricted area radiation levels less than 2 millirem in any one hour?			
e. Are gauges stored in a manner to prevent unauthorized use or removal?			
f. Are records maintained?			
8. Operating and Emergency Procedures			
a. Are current copies of operating and emergency procedures available to each individual?			
b. Did any emergencies occur? Were they properly handled?			
9. Leak Tests			
a. Was each customer gauge leak tested upon receipt?			
b. Are leak tests performed in accordance with procedures?			
c. Is each gauge in inventory leak tested at least every 6 months?			
d. Are records of leak test results maintained for each gauge?			
e. Were any sources found leaking?			
10. Maintenance of Gauges			
a. Are procedures followed for cleaning and lubrication of gauges?			
b. When the source rod is removed from the gauge is it stored in a shielded pig?			
c. Do personnel observe good ALARA practices?			

Audit Item	Yes	No	Comments
11. Transportation			
a. Are DOT 7A packages used for transport of gauges? Is documentation of package testing maintained?			
b. Is special form source documentation maintained?			
c. Packages have two labels (e.g. Yellow-II) on opposite sides with TI, nuclide, activity, and hazard class? Cargo only label?			
d. Packages are properly marked?			
e. Packages are inspected prior to shipment?			
f. Packages are sealed (cases locked)?			
g. Shipping papers are properly prepared for all gauges shipped?			
h. Bill of lading (shipping papers) and emergency instructions are within drivers reach during transport?			
i. Packages are not carried in passenger compartment of vehicle?			
j. Packages are secured against movement in vehicle?			
12. Notifications and Reports			
a. Was any radioactive material lost or stolen? Were reports made?			
b. Did any overexposures occur? Were reports made?			
c. If any events occurred, was the root cause determined and corrective actions taken?			
13. Posting and Labeling			
a. "Notice to Workers" posted?			
b. Notice posted stating where workers can read a copy of the regulations and license?			

14. Summary of Deficiencies Identified During Audit (attach additional sheets as necessary)	
Deficiencies	Proposed Corrective Actions/Planned Completion Date

15. Other Recommendations for Improvement (attach additional sheets as necessary)

ADOT Intermodal Transportation

DECLARATION OF PREGNANCY

I hereby voluntarily declare that I am pregnant.

My best estimate of the date of conception is _____ (mm/dd/yyyy)

While this declaration is in effect, I agree to abide by all restrictions deemed necessary by Arizona Department of Transportation to keep the occupational exposure to my unborn child below 500 mrem. This may include accepting reassignment to different job at equal pay for the duration of the pregnancy.

I understand that I may revoke this declaration at any time by providing written notification to the Department Radiation Safety Officer.

Name (print) _____ EIN or SSN _____

Signature _____ Date _____

TO BE COMPLETED BY DRSO

Received by _____ Date _____

Department Radiation Safety Officer

1. Dose estimate for period from conception to declaration: _____ mrem

2. Dose that may be received during remainder of pregnancy: _____ mrem
   (500 mrem - line 1) If line 1 > 450 mrem, enter 50 mrem.

3. Likely to receive > 50 mrem during pregnancy? Yes ____ No
   (If yes, monitoring required.)

ADOT Intermodal Transportation

ARIZONA DEPARTMENT OF TRANSPORTATION
RADIOACTIVE MATERIALS INSPECTION REPORT

CENTRAL LAB ☐ CONST. OFFICE ☐
REGIONAL LAB ☐ FIELD LOCATION ☐

Org. Number: _____

Facility Name or Project #: _____

Facility Location or Vehicle #: _____

		Y	N	NA
1.	**STORAGE**			
a.	Is gauge stored in its transportation case?	☐	☐	☐
b.	Is gauge stored in locked storage unit?	☐	☐	☐
c.	Is storage unit within a locked building or facility?	☐	☐	☐
d.	Transport case is in an unimpaired physical condition?	☐	☐	☐
e.	Hinges, hasps, and latches are in good condition?	☐	☐	☐
f.	Plan or drawing of facility and location of gauge storage area within facility?	☐	☐	☐
2.	**SURVEYS AND MONITORING**			
a.	Has a radiation survey been performed outside the storage area?	☐	☐	☐
b.	Have there been any changes to the storage, security, or use of surrounding areas that would necessitate a new survey?	☐	☐	☐
c.	Survey equipment calibrated and operational?	☐	☐	☐
d.	Personnel monitoring devices used by only those individuals to whom the device has been issued?	☐	☐	☐
e.	Control badges stored in a non-radiation area?	☐	☐	☐
3.	**POSTING AND LABELING**			
a.	ARRA-6 NOTICE TO EMPLOYEES	☐	☐	☐
b.	CAUTION-RADIOACTIVE MATERIALS	☐	☐	☐
c.	TITLE 12, 7-31, NOTICE FORM	☐	☐	☐
d.	EMERGENCY CONTACT LIST	☐	☐	☐
e.	Transport case has required labels (1) DOT label and (2) Yellow II labels?	☐	☐	☐
f.	Utilization Log (standard count logbook)?	☐	☐	☐
g.	Radiation Safety Manual / Gauge Operating Procedures?	☐	☐	☐
4.	**TRANSPORTATION**			
a.	Is individual transporting a nuclear gauge on the approved operator's list?	☐	☐	☐
b.	Is individual transporting nuclear gauge wearing a TLD?	☐	☐	☐
c.	Is a Transportation/Transfer Receipt Form completed and visible to the driver in the cab of the vehicle?	☐	☐	☐
d.	Is nuclear gauge locked (padlock in handle) and in its approved transport case secured free from movement?	☐	☐	☐
e.	Is nuclear gauge as far away from the passenger compartment as possible?	☐	☐	☐
f.	If transporting nuclear gauge in a closed vehicle, is vehicle locked?	☐	☐	☐
g.	If transporting nuclear gauge in an open bed vehicle, is the gauge secured to the vehicle?	☐	☐	☐

		Y	N	NA
5.	**OPERATION**			
a.	Is individual operating nuclear gauge on the approved operator's list?	☐	☐	☐
b.	Is individual operating nuclear gauge wearing a TLD?	☐	☐	☐
c.	Does operator of nuclear gauge maintain control of gauge at all times?	☐	☐	☐
d.	When nuclear gauge is not in use, is gauge locked in safe position and returned to its transport case for storage?	☐	☐	☐
e.	Does operator practice the ALARA concept at all times?	☐	☐	☐
6.	**RECORDS**			
a.	ARRA License 7-31, Amendments and letters legible and on file?	☐	☐	☐
b.	Training records/Licensed Operators list current and on file?	☐	☐	☐
c.	Leak Test/ Physical Inventory records current and on file?	☐	☐	☐
d.	Dosimetry reports current and on file?	☐	☐	☐
e.	Accumulative Dosage records current and on file?	☐	☐	☐
f.	Transportation/ Transfer Receipt records current and on file?	☐	☐	☐
g.	Calibration and Maintenance records current and on file?	☐	☐	☐
h.	Audits and other reviews of program content and implementation current and on file?	☐	☐	☐
7.	**INSPECTION RESULTS**			
a.	Were all applicable conditions reviewed? (if no, describe under remarks)	☐	☐	☐
b.	Were any deficiencies identified? (if yes, describe under remarks)	☐	☐	☐
c.	Corrective actions planned or taken? (if yes, describe under remarks)	☐	☐	☐

8. REMARKS

_____

_____

_____

_____

INSPECTORS NAME: _____

INSPECTORS TITLE: _____

SIGNATURE: _____

DATE: _____

2/7/2013

ADOT Intermodal Transportation

ARIZONA DEPARTMENT OF TRANSPORTATION
SIX-MONTH LEAK TEST / INVENTORY REPORT

The ARRA Radioactive Materials License No. 7-31 requires ADOT to conduct a leak test and physical inventory every six months on all sealed sources of radioactive material covered by the referenced license. To assure compliance, complete this form for each sealed source in your respective region and return to the Department Radiation Safety Officer.

Fill in the blanks or circle the appropriate information.

Gauge Manufacturer: Troxler CPN Humboldt

Gauge Model No. 501 3241 4640 5001

Gauge Serial No. _____

Isotope: Cs-137 Am-241:Be
Activity: 8mCi 10mCi 40mCi 50mCi 100mCi

Gauge Location: _____ _____
Org. No. _____
Address

Leak Test / Inventory Date: _____

Taken By: (print name) _____

(signature) _____

Log Book Entry Dated and Signed or Initialed: Yes No

Date of Previous Leak Test: _____

DO NOT WRITE BELOW THIS LINE

This is to certify the above described smear has been assayed at our facilities for indication of source leakage.

Our findings show the leakage to be

ALPHA	BETA-GAMMA

Certified By: _____ Date: _____
Arizona State University

ARIZONA DEPARTMENT OF TRANSPORTATION

SIX-MONTH LEAK TEST / INVENTORY REPORT

LEAK TEST INSTRUCTIONS

1. Using a ball-point or permanent type ink pen, fill out the Six-Month Leak Test / Inventory Report as indicated on the form.

2(a) For 5001 series gauges, remove the front panel of the gauge. Looking into the gauge interior, wipe the label or cover areas of the Am-241:Be capsule with the Q-tip, as instructed in the ADOT Radiation Safety Training Course (or call the Department or Regional Radiation Safety Officer for instruction). After wiping the first source do not touch the cotton swab with any part of your hands.

2(b) With the gauge on its side and the base away form the operator, wipe the area around the metal wiper ring in the removable plate on the bottom surface of the gauge. This will complete the leak test for the 5001 series gauges.

2(c) Return the Q-tip to the plastic envelope and return the completed form and leak test kit to the Department Radiation Safety Officer.

3. For Model 4640 (Thin Layer Density), Model 3241 (Asphalt Content), and Model 501 (Down Hole Probe) gauges, leak testing shall be performed in accordance with the manufacturer's instructions. After wiping the source(s), complete step 2(c).

4. Enter date of leak test and sign or initial the entry into the log book for the gauge. Also, note the same on the front of this form; and note the date that the gauge was previously leak tested on the front of this form.

ARIZONA DEPARTMENT OF TRANSPORTATION

RADIOACTIVE MATERIALS UNIT
TRANSPORTATION/TRANSFER RECEIPT FORM

A copy of this form must be visible to the driver in the cab of the vehicle when transporting the device listed below.

IN CASE OF EMERGENCY CONTACT THE DEPARTMENT OF PUBLIC SAFETY (DPS) - (602) 223-2212

THREE PART FORM - PLEASE PRESS FIRMLY

TO: ADOT ORG: _____ FROM: ADOT ORG: _____

_____ CITY / TOWN _____ CITY / TOWN

HAZARDOUS MATERIAL

PROPER SHIPPING NAME: RQ, RADIOACTIVE MATERIAL, SPECIAL FORM, N.O.S.
HAZARD CLASS: RADIOACTIVE MATERIAL
IDENTIFICATION NUMBER: UN3332
TRANSPORT LABEL: YELLOW II
TRANSPORT INDEX: 0.4 mR/Hr.

MFR.	MODEL #	SERIAL #	TYPE	ISOTOPE	ACTIVITY (mCi)
				Cs.137	8, 10
				Am-241:Be	40, 50, 100, 300

MFR: C=CPN; H=Humboldt; T-Troxler. Type: MD = Moisture/Density; DP = Depth Probe; AC = Asphalt Content

_____ SHIPPING CASE	_____ OPERATOR/SAFETY MANUAL	_____ REMOTE CONTROLLER
_____ STANDARD BLOCK	_____ LOCK & GAUGE	_____ PRINTER
_____ HAMMER	_____ CHAIN W/LOCK	_____ SAMPLE PANS
_____ KEYS	_____ CABLE, _____	_____ CLEANING BRUSH
_____ SCRAPER PLATE	_____ CABLE CLAMP	_____ CABLE RS232C
_____ DRILL ROD	_____ CABLE COUPLING	_____ PLUG FIXTURE
_____ ROD EXTRACTION TOOL	_____ DUMMY PROBE W/CORD	_____ CHARGER
_____ LOG BOOK	_____ SCALER	_____ _____
_____ _____	_____ _____	_____ _____
_____ _____	_____ _____	_____ _____

By signing below I acknowledge receipt of the above nuclear device and accessories, and certify that I have received radiation safety training in accordance with the requirements of ARRA License No. 07-031.

TRANSFERRED BY:	RECEIVED BY:
Signature/ Date _____	Signature/ Date _____
Print Name/ Badge No.: _____	Print Name/ Badge No.: _____

44-0600 R9/02

WHITE : MATERIALS ANNEX YELLOW: USER PINK: REGIONAL RSO

ADOT Intermodal Transportation

SEMI-ANNUAL (MARCH, SEPTEMBER) NUCLEAR GAUGE INVENTORY

Region:_____

Gauge State Number	Gauge Serial Number	Gauge Model Number	Gauge Make	Location and Org	Regional Radiation Safety Officer or Alternate name coordinating gauge inventory	Date and time of physical inventory	Name and EIN of person performing physical inventory

INSTRUCTIONS: The Regional Radiation Safety Officer and/or their Alternate must first identify all radioactive materials (gauges) and their locations within the Region by review of Transfer/Receipt forms. Once radioactive materials (gauges) locations are identified the RRSO or Alternate will contact the user of the radioactive materials (gauges) and have those personnel perform a physical inventory of the radioactive materials. All columns above must be completed. Once all radioactive materials inventory is identified and documented send the completed copy to the Department Radiation Safety Officer as soon as possible.

2/7/13

ARIZONA DEPARTMENT OF TRANSPORTATION * MATERIALS GROUP

1221 NORTH 21ST AVENUE PHOENIX, ARIZONA 85009-3740 PHONE (602) 712- 7231

POLICY AND PROCEDURE DIRECTIVE

James P. Delton
Assistant State Engineer

TO: ALL MANUAL HOLDERS	PPD NO. No. 17
SUBJECT: ACQUISITION, DISPOSAL, AND USE OF ADOT-LICENSED MATERIAL SOURCES AND STOCKPILE SITES	EFFECTIVE DATE: February 27, 2009

1. GENERAL

1.1 This Policy and Procedure Directive (PPD) describes the procedures, roles, and responsibilities for ADOT Districts and Materials Group to acquire, dispose of, and use ADOT-licensed material sources and stockpile sites. The PPD also advises District and contractor personnel in how to obtain approval to use ADOT-licensed material sources for construction projects. This PPD requires involvement by the Materials Group and the Districts in locating and identifying proposed sites, as well as disposing of sites that are no longer needed. Input from each construction and maintenance Org is imperative to locating new sites and making recommendations to expand or dispose of existing sites.

2. ACQUISITION AND DISPOSAL PROCEDURES

2.1 The ADOT Materials Group, Material Source Supervisor (MSS) will arrange for material sources and stockpile sites, statewide. Stockpile sites that Materials Group will secure for District use include the following:

- sites that have stockpiles only
- sites that have no equipment storage (temporary storage activities are acceptable)
- sites that have no facilities (buildings, restrooms, fueling stations)

2.2 The District personnel and the MSS will continually seek opportunities for developing new material sources and stockpile sites. Input from the Resident Engineer, Maintenance Engineer, State Geotechnical Design Engineer, and land manager or owner will be critical in locating sources/sites suitable for project needs. However, in most cases, the State Materials Engineer and the District Engineer must be agreeable to obtaining or disposing of any material source or stockpile site.

2.3 The MSS will submit an application (SF-299) to the federal land managing agency to identify the need for a new, or renewal of the, license. The term “license” applies to Special Use Permits, Letters of Consent (Title 23 Appropriation), Operational Agreements, Haul Road Easements, and other documents for which the State Materials Engineer has delegated authority. The MSS, or designated representative, will be the sole point of contact with the land

manager. If the source/site is located on private land, the same protocol exists, except a letter or phone call (rather than submitting the SF-299) to the private land owner will be initiated by the MSS.

2.4 Materials Group will coordinate with the District to delineate the material source or stockpile site boundaries. Materials Group will obtain title reports, obtain aerials, sketch the boundary, provide legal descriptions, initiate geotechnical investigations, and request environmental clearance from the ADOT Office of Environmental Services (OES), or in some cases, from the land manager.

2.5 The MSS will coordinate all licensing activities with the District Engineer, or designated representative. The State Materials Engineer, or designated representative, will coordinate with ADOT Risk Management regarding the terms of the license. All permits and licenses shall be reviewed by a representative of the Attorney General's office. The State Materials Engineer will sign the license issued.

2.6 Prior to disposal of a material source or stockpile site, the District Engineer must approve that the disposal process may commence. Reclamation/restoration of the source/site will be completed prior to any action taking place.

2.7 The MSS will work with the ADOT Materials Right-of-Way Agent to facilitate the disposal process.

3. USE OF ADOT-LICENSED SOURCES BY CONTRACTORS

3.1 The Resident Engineer (RE) will ensure that the contractor supplies a new environmental assessment anytime an ADOT-licensed source is proposed for a project. The environmental assessment form will need to have the following attachments:

- copy of the license or permit from the land manager or owner,
- copy of the most current environmental determination or analysis,
- project-specific plan of operations,
- project-specific reclamation/restoration plan, and
- Erosion and Pollution Control Plan (EPCP), or Stormwater Pollution Prevention Plan (SWPPP), as required in Section 3.4.

3.2 The RE will review and submit the documents listed in Section 3.1 to the MSS, who will review and forward the items to the land manager or owner, as appropriate. Review and approval of these documents must be completed by the RE, MSS, and land manager or owner, prior to the contractor bringing any equipment on site.

3.3 The RE will ensure that the contractor adheres to the approved project-specific plan of operation and the approved reclamation/restoration plan. Following these approved plans will ensure that the contractor continues to work toward the goal of remediation while conducting activities such as mining, blasting, and stockpiling. To the extent practicable, any

changes to these plans shall be approved by the MSS, the land manager or owner, and the District prior to any additional work being conducted on-site.

3.4 The RE will ensure that the source/site is included in the SWPPP or EPCP for the construction project. If the construction project does not require a SWPPP or an EPCP, the contractor shall prepare and implement a SWPPP or an EPCP for ancillary facilities; for example, the haul road and the entire pit boundary (as depicted on the plat map and pit sketch). Implementation, inspection, and maintenance of the Best Management Practices (BMPs) will be the responsibility of the District or contractor.

3.5 The RE will provide Materials Group with any revisions to all required documents and all inspection reports upon completion of the project, unless changes are as specified in Section 3.3.

3.6 Representatives from Materials Group and the District, the land manager or owner, and the contractor shall meet on-site no sooner than one week prior to project completion to ensure that restoration activities are being completed as proposed.

4. SUMMARY

4.1 The MSS will facilitate licensing by coordinating efforts between Materials Group, the District, the Right-of-Way agent, the OES, and the land managing agency or owner. All questions or concerns regarding new or existing material sources/sites will be directed to the MSS. Implementing this policy will require cooperation and involvement between Materials Group, Districts, and the OES. This policy is visualized as an opportunity to distribute responsibility, streamline license processing and contractor submittals, maintain our commitment to effective partnering while building teamwork, and most importantly to allow consistent operations statewide.

James P. Delton, P.E.
Assistant State Engineer
Materials Group

ARIZONA DEPARTMENT OF TRANSPORTATION * MATERIALS GROUP

1221 NORTH 21ST AVENUE PHOENIX, ARIZONA 85009-3740 PHONE (602) 712- 7231

POLICY AND PROCEDURE DIRECTIVE

James P. Delton
Assistant State Engineer

TO: ALL MANUAL HOLDERS	PPD NO. 18
SUBJECT: DETERMINING SAMPLE TIMES AND LOCATIONS FOR END PRODUCT ASPHALTIC CONCRETE	EFFECTIVE DATE: February 27, 2009

1. GENERAL

1.1 This procedure outlines the requirements for determining sample times and locations for end product asphaltic concrete.

1.2 The acceptance of end product asphaltic concrete is based on statistical methods, making it critical that random samples be obtained. If random samples are not obtained, the test results may not reflect the true characteristics of the material being evaluated.

1.3 Material should not be excluded from the random sampling process just because it appears to be segregated or non-uniform. With the exception of those areas outlined in the Specifications to be excluded from testing, all material that is placed on the project must be considered. The only way that the test results will give a true picture of all the material included in the project is if samples are taken randomly from all the material placed. It is the nature of random sampling that some of the samples will represent below average material, while others will represent above average material.

1.4 The sample times and locations determined by this procedure should not be shared with the contractor until just prior to the sample being obtained, or in the case of core locations, until compaction of the lot is completed.

1.5 On rare occasion, it may be necessary to modify the requirements of this procedure due to plant breakdowns, weather, or other unexpected circumstances. In those cases, the Engineer and contractor must work together to identify the best solution which most closely adheres to the intent of this procedure. That may involve a split lot, obtaining fewer samples than required by specification, or obtaining a sample prior to the time required in cases where the operation is unexpectedly shut down.

2. STRATIFIED RANDOM SAMPLING

2.1 In order to ensure that samples represent the true characteristics of the entire lot being tested, a stratified random sampling procedure shall be incorporated into the sampling process. This is accomplished by dividing the lot into sublots. The quantity associated with each sublot is determined by dividing the lot by the number of samples required. Sample times and locations for each sublot are then determined on a random basis. Specific procedures to be followed for selecting sample times for a mixture properties lot and locations for a compaction lot are described below.

3. SAMPLE TIMES FOR MIXTURE PROPERTIES LOT

3.1 Sampling for mixture properties will be based on time or tonnage. When paving is expected to be sporadic during a given shift, it may be more appropriate to sample for mix properties based on tonnage rather than time.

3.2 In order to determine sample times, the expected duration of the paving shift is first divided by the number of samples to determine the duration of each sublot. The sample time within each sublot is then determined on a random basis. This is accomplished by multiplying a random number by the duration of the sublot, and adding that value to the beginning time of the sublot to be sampled. If the duration of the shift changes after production begins, sample times for the remaining samples should be determined using the expected time left in the shift as well as the number of remaining samples.

3.3 The contractor should be expected to obtain an acceptance sample as soon as possible after being notified that a sample is required. Typically the sample should be obtained within 5 minutes of the request.

3.4 Example 1 and Example 2 below illustrate how sample times are determined.

EXAMPLE 1:

The contractor plans to pave from 7:00 am to 5:00 pm. Four plate samples are required based on the specifications for end product asphaltic concrete paving. Determine stratified random sample time for this scenario.

First, divide the lot into four sublots;

10 hour shift / 4 samples per shift = 2.5 hours per sublot

Sublot 1 is from 7:00 am to 9:30 am
Sublot 2 is from 9:30 am to 12:00 pm
Sublot 3 is from 12:00 pm to 2:30 pm
Sublot 4 is from 2:30 pm to 5:00 pm

Then, determine the specific time to sample each sublot;

Random numbers are generated in accordance with Attachment #1. For the sake of this example, assume the four random numbers generated are 0.502, 0.452, 0.841 and 0.046.

Multiply each random number by the duration of the sublot;

0.502 x (2.5 hours) = 1.255 hours
0.452 x (2.5 hours) = 1.130 hours
0.841 x (2.5 hours) = 2.103 hours
0.046 x (2.5 hours) = 0.115 hours

Add the interval determined above to the start time of the sublot to determine actual sample time;

Sample 1 to be taken at 7:00 am plus 1.255 hours = 8:15 am
Sample 2 to be taken at 9:30 am plus 1.130 hours = 10:38 am
Sample 3 to be taken at 12:00 pm plus 2.103 hours = 2:06 pm
Sample 4 to be taken at 2:30 pm plus 0.115 hours = 2:37 pm

EXAMPLE 2:

Assume sample times are determined as shown above in Example 1. However, at 12:45 pm the contractor informs you that they will quit paving at 3:00 pm.

Sample 1 and Sample 2 have already been taken at the times determined in Example 1. At 12:45 pm there are 2 hours and 15 minutes (2.250 hours) remaining in the shift. The stratified random sample times for the two remaining samples are determined as follows.

First, divide the remaining time in the shift into two sublots;

2.250 hour shift / 2 samples per shift = 1.125 hours per sublot

Sublot 3 is from 12:45 pm to 1:53 pm
Sublot 4 is from 1:53 pm to 3:00 pm

Then, determine the specific time to sample each remaining sublot;

Two new random numbers are generated in accordance with Attachment #1. For the sake of this example, assume the two random numbers generated are 0.208 and 0.745.

Multiply each random number by the duration of the sublot;

0.208 x (1.125 hours) = 0.234 hours
0.745 x (1.125 hours) = 0.838 hours

Add the interval determined above to the start time of the sublot to determine actual sample time;

Sample 3 to be taken at 12:45pm plus 0.234 hours = 12:59 pm
Sample 4 to be taken at 1:53pm plus 0.838 hours = 2:43 pm

3.5 When sampling for mixture properties is based on tonnage, the total tonnage expected for the lot is divided by the number of required samples to determine the quantity of material in each sublot. A random sample is obtained from each sublot using random numbers generated in accordance with Attachment #1.

3.6 Example 3 below illustrates how to determine sampling based on tonnage.

EXAMPLE 3:

The contractor plans to place 1800 tons of mix during a given shift. Four plate samples are required based on the specifications for end product asphaltic concrete paving. Determine stratified random sample tonnages for this scenario.

First, divide the lot into four sublots;

1800 tons / 4 samples per shift = 450 tons per sublot

Sublot 1 is material between 0 and 450 tons
Sublot 2 is material between 450 and 900 tons
Sublot 3 is material between 900 and 1350 tons
Sublot 4 is material between 1350 and 1800 tons

Then, determine the specific tonnage when each sample should be taken;

Random numbers are generated in accordance with Attachment #1. For the sake of this example, assume the four random numbers generated are 0.731, 0.344, 0.502 and 0.245.

Multiply each random number by the tonnage in each sublot;

0.731 x (450 tons) = 329 tons
0.344 x (450 tons) = 155 tons
0.502 x (450 tons) = 226 tons
0.245 x (450 tons) = 110 tons

Add the tonnage determined above to the tonnage at the beginning of the sublot to determine the sample tonnage;

Sample 1 to be taken at 0 plus 329 tons = 329 tons
Sample 2 to be taken at 450 plus 155 tons = 605 tons
Sample 3 to be taken at 900 plus 226 tons = 1126 tons
Sample 4 to be taken at 1350 plus 110 tons = 1460 tons

4. SAMPLE LOCATIONS FOR COMPACTION LOT

4.1 Sampling for compaction will be based on the area paved, and requires determining a random station and offset for each sample location. When possible, areas to be excluded from testing, as allowed by the specifications and the Engineer, should be eliminated prior to determining the sample locations. It is not acceptable to arbitrarily move a sample a short distance from its determined location because it falls in an area excluded from testing. Rather, when a sample location falls within an area that is not subject to testing a new random location shall be determined for that sample.

4.2 In order to determine sample locations, the total length paved is first divided by the number of samples to determine the length of each sublot. The station limits for each sublot are then calculated followed by the random sample location within each sublot. The sample station is calculated by multiplying a random number by the length of the sublot, and adding that length to the beginning station of the sublot to be sampled. The offset distance is calculated by multiplying a separate random number by the width of the pavement subject to testing, at the station calculated above.

NOTE: In many cases the width subject to testing will be less than the total width that was paved. The width used in calculating the random offset should be determined based on the top surface of the mat, excluding any slope or other area excluded by specification from testing requirements.

4.3 Figure 1 illustrates typical locations to be excluded from testing on a multiple pass paving operation.

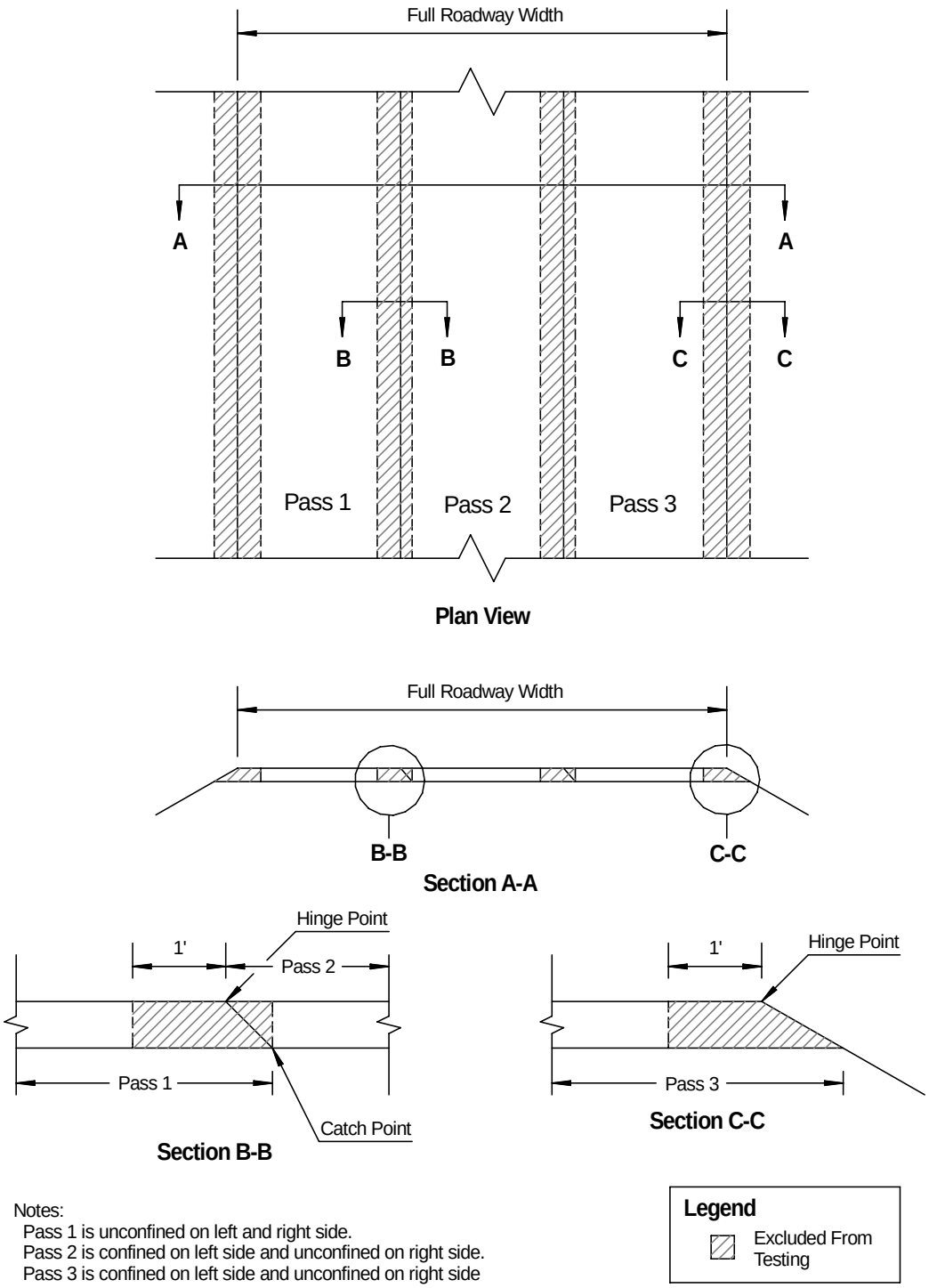

Figure 1
(Not to Scale)

4.4 Example 4 and Example 5 below illustrate how sample locations are determined.

EXAMPLE 4:

The contractor has paved an area as illustrated in Figure 2. The area paved is 6000 feet long and the width varies between 12 and 16 feet, not including the 3:1 slope along the unconfined edge of pavement. The left side of the mat is confined between Sta 10+00 and Sta 46+00 by a previous lot. The left side of the mat between Sta 46+00 and Sta 70+00, as well as the entire right side of the mat, is unconfined. The specifications exclude from testing the outside 1 foot of the unconfined edge. Ten core samples are required based on the specifications for end product asphaltic concrete paving. Determine the stratified random sample locations for this scenario.

First, divide the lot into ten sublots;

Length of Sublot = 6000 feet / 10 cores per lot = 600 feet

Sublot 1 is from Sta 10+00 to 16+00
Sublot 2 is from Sta 16+00 to 22+00
Sublot 3 is from Sta 22+00 to 28+00
Sublot 4 is from Sta 28+00 to 34+00
Sublot 5 is from Sta 34+00 to 40+00
Sublot 6 is from Sta 40+00 to 46+00
Sublot 7 is from Sta 46+00 to 52+00
Sublot 8 is from Sta 52+00 to 58+00
Sublot 9 is from Sta 58+00 to 64+00
Sublot 10 is from Sta 64+00 to 70+00

Then, determine the specific location to be sampled from each sublot;

Random numbers are generated in accordance with Attachment #1. Two random numbers are required for each sample location; one for the station, and one for the offset. For the sake of this example, assume the random numbers generated are as follows:

Random Numbers for Stationing:

0.475, 0.721, 0.496, 0.272, 0.458, 0.694, 0.410, 0.150, 0.055, 0.455

Random Number for Offsets:

0.056, 0.939, 0.839, 0.800, 0.705, 0.047, 0.236, 0.991, 0.170, 0.699

Multiply the first random number (Stationing) by the length of the sublot, and add that to the beginning station of the sublot. Multiply the first random number (Offsets) by the width subject to testing. Round the station to the nearest 1 foot and the offset to the nearest 0.5 foot. The resulting station and offset determines the location for the sample. The process is continued for each sublot;

Sample 1: Station = (0.475 x 600) + Sta 10+00 = Sta 12+85
Offset = (0.056 x 11) = 0.5 ft

Sample 2: Station = (0.721 x 600) + Sta 16+00 = Sta 20+33
Offset = (0.939 x 11) = 10.5 ft

Sample 3: Station = (0.496 x 600) + Sta 22+00 = Sta 24+98
Offset = (0.839 x 11) = 9.0 ft

Sample 4: Station = (0.272 x 600) + Sta 28+00 = Sta 29+63
Offset = (0.800 x 12.45) = 10.0 ft

NOTE: The pavement width at this location varies. The actual width of pavement at each station must be calculated in order to determine the sample offset.

Sample 5: Station = (0.458 x 600) + Sta 34+00 = Sta 36+75
Offset = (0.705 x 15) = 10.5 ft

Sample 6: Station = (0.694 x 600) + Sta 40+00 = Sta 44+16
Offset = (0.047 x 15) = 0.5 ft

Sample 7: Station = (0.410 x 600) + Sta 46+00 = Sta 48+46
Offset = (0.236 x 14) = 3.5 ft

Sample 8: Station = (0.150 x 600) + Sta 52+00 = Sta 52+90
Offset = (0.991 x 14) = 14.0 ft

Sample 9: Station = (0.055 x 600) + Sta 58+00 = Sta 58+33
Offset = (0.170 x 14) = 2.5 ft

Sample 10: Station = (0.455 x 600) + Sta 64+00 = Sta 66+73
Offset = (0.699 x 14) = 10.0 ft

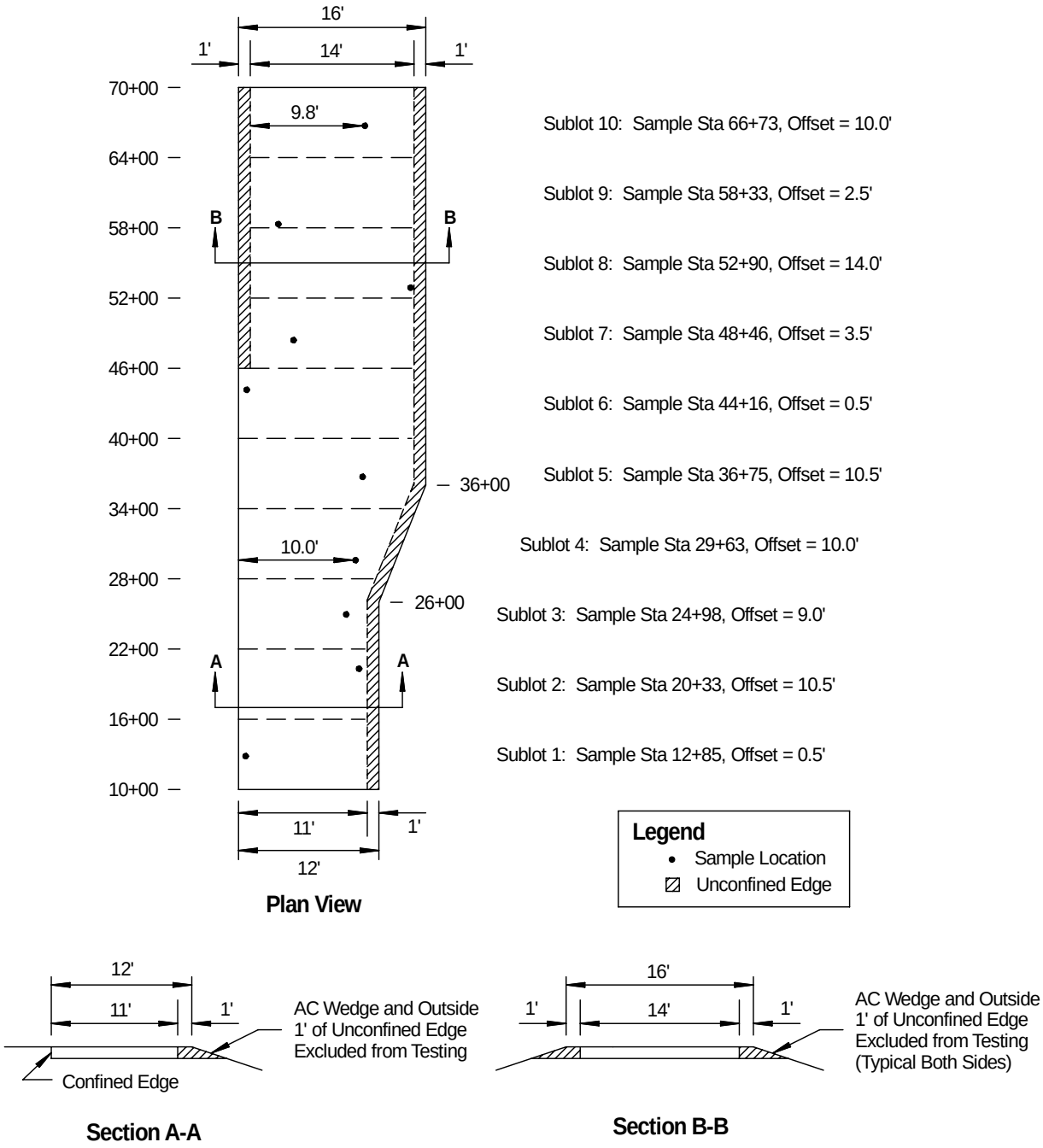

Figure 2
(Not to Scale)

EXAMPLE 5:

Assume the same conditions as outlined in Example 4. However, when laying out Sample 9 it is discovered that a manhole exists at the sample location.

When a sample location falls within an area not subject to testing, a new random location must be determined. It is not acceptable to arbitrarily move a sample location.

Determine a new sample location for Sample 9;

For the sake of this example, assume the new random numbers generated are as follows:

Random number for new station: 0.730

Random number for new offset: 0.412

Sample 9: Station = (0.730 x 600) + Sta 58+00 = Sta 62+38
Offset = (0.412 x 14) = 6.0 ft

James P. Delton, P.E.
Assistant State Engineer
Materials Group

Attachment (1)

METHODS FOR SELECTING RANDOM NUMBERS

There are several acceptable methods for selecting random numbers including the use of a calculator, computer spreadsheet, or a random number table.

1) Many calculators have a random number function that can be used to determine random numbers. Each calculator is different and the user should review the manual for a given calculator to determine how to use this function. Sets of random numbers may be generated directly from the calculator by repeated use of this function.

2) Most computer spreadsheets also have a function to generate random numbers. A procedure similar to that described above for calculators can be used to generate a set of random numbers using a computer spreadsheet.

3) In order to properly use a random number table, two "seed" numbers must first be selected to determine a starting row and column within the table. Seed numbers may be determined using a calculator or computer spreadsheet as described above, or they can be determined by "pointing". To select seed numbers by pointing, place the random number table in front of you and with your eyes closed place a pointer on the table to select the seed number. Suitable pointers would be any devise with a small tip including a pen or mechanical pencil.

   Once two seed numbers are selected, they can be used to determine the starting point for selecting random numbers within the random number table. The first seed number should be multiplied by the number of rows in the table. That product is rounded to the nearest whole number and determines the row for the starting point. The second seed number should be multiplied by the number of columns in the table. That product is rounded to the nearest whole number and determines the column for the starting point. The random number at the intersection of the starting row and column is the first random number used in determining the random sample location. Additional random numbers are selected by moving to the right along the row, or down along the column, until the required number of random numbers are generated. Once the end of a row or column is reached, simply start at the beginning of the next row or column to continue recording random numbers.

4) As an alternate to the methods given above for determining random numbers, the standard practice described in ASTM D3665, "Practice for Random Sampling of Construction Materials", can be used if desired.

	1	2	3	4	5	6	7	8	9	10
1	0.566	0.282	0.133	0.355	0.016	0.915	0.813	0.695	0.524	0.309
2	0.706	0.702	0.539	0.107	0.557	0.981	0.959	0.393	0.069	0.746
3	0.113	0.924	0.855	0.781	0.755	0.326	0.071	0.642	0.153	0.646
4	0.129	0.688	0.575	0.584	0.073	0.615	0.384	0.058	0.053	0.992
5	0.031	0.224	0.400	0.324	0.886	0.171	0.768	0.164	0.036	0.921
6	0.944	0.986	0.295	0.664	0.226	0.963	0.546	0.151	0.881	0.586
7	0.484	0.377	0.246	0.852	0.444	0.004	0.335	0.198	0.222	0.078
8	0.193	0.824	0.184	0.828	0.442	0.859	0.890	0.797	0.104	0.571
9	0.872	0.042	0.191	0.650	0.630	0.941	0.091	0.826	0.491	0.519
10	0.213	0.795	0.464	0.773	0.648	0.622	0.024	0.870	0.604	0.056
11	0.606	0.522	0.511	0.408	0.480	0.386	0.460	0.297	0.666	0.344
12	0.446	0.155	0.788	0.595	0.178	0.488	0.961	0.684	0.448	0.639
13	0.500	0.804	0.990	0.999	0.917	0.375	0.426	0.761	0.839	0.770
14	0.879	0.841	0.293	0.697	0.497	0.202	0.120	0.932	0.082	0.559
15	0.240	0.486	0.422	0.679	0.064	0.553	0.440	0.366	0.357	0.850
16	0.764	0.466	0.904	0.884	0.579	0.662	0.238	0.051	0.373	0.562
17	0.753	0.719	0.262	0.200	0.699	0.997	0.515	0.127	0.806	0.713
18	0.109	0.682	0.289	0.637	0.628	0.741	0.910	0.830	0.027	0.431
19	0.060	0.395	0.369	0.206	0.313	0.244	0.304	0.009	0.710	0.817
20	0.131	0.147	0.864	0.528	0.140	0.937	0.597	0.790	0.801	0.451
21	0.766	0.810	0.608	0.799	0.218	0.471	0.435	0.919	0.173	0.617
22	0.095	0.204	0.673	0.535	0.300	0.599	0.286	0.093	0.482	0.100
23	0.397	0.693	0.952	0.229	0.302	0.089	0.613	0.317	0.868	0.759
24	0.284	0.593	0.737	0.135	0.269	0.258	0.544	0.946	0.717	0.266
25	0.002	0.195	0.411	0.551	0.124	0.311	0.906	0.044	0.271	0.437
26	0.728	0.329	0.473	0.337	0.175	0.404	0.273	0.977	0.675	0.331
27	0.815	0.115	0.577	0.633	0.939	0.315	0.098	0.306	0.102	0.138
28	0.591	0.362	0.186	0.644	0.568	0.901	0.624	0.948	0.690	0.162
29	0.029	0.757	0.793	0.291	0.049	0.837	0.537	0.655	0.526	0.322
30	0.013	0.433	0.382	0.346	0.349	0.892	0.144	0.602	0.508	0.808
31	0.908	0.351	0.928	0.080	0.158	0.180	0.555	0.075	0.744	0.364
32	0.708	0.160	0.209	0.231	0.122	0.517	0.775	0.417	0.424	0.320
33	0.189	0.877	0.453	0.233	0.844	0.406	0.777	0.260	0.735	0.220
34	0.930	0.748	0.988	0.242	0.950	0.857	0.380	0.504	0.730	0.875
35	0.333	0.888	0.897	0.513	0.653	0.087	0.912	0.167	0.249	0.255
36	0.895	0.468	0.786	0.169	0.704	0.668	0.018	0.972	0.111	0.280
37	0.784	0.833	0.391	0.142	0.118	0.278	0.819	0.067	0.686	0.402
38	0.955	0.415	0.420	0.040	0.821	0.033	0.211	0.935	0.475	0.251
39	0.619	0.493	0.084	0.235	0.462	0.353	0.506	0.899	0.722	0.011
40	0.340	0.020	0.750	0.564	0.724	0.975	0.626	0.957	0.253	0.670
41	0.371	0.926	0.360	0.038	0.428	0.455	0.966	0.007	0.548	0.531
42	0.495	0.477	0.611	0.182	0.657	0.149	0.848	0.588	0.342	0.726
43	0.635	0.835	0.022	0.779	0.979	0.062	0.275	0.995	0.533	0.866
44	0.582	0.457	0.739	0.264	0.677	0.542	0.983	0.413	0.968	0.389
45	0.861	0.659	0.970	0.715	0.502	0.846	0.047	0.573	0.733	0.215

Random Number Table

ARIZONA DEPARTMENT OF TRANSPORTATION * MATERIALS GROUP

1221 NORTH 21ST AVENUE PHOENIX, ARIZONA 85009-3740 PHONE (602) 712 - 7231

POLICY AND PROCEDURE DIRECTIVE

TO: ALL MANUAL HOLDERS	PPD NO. 19a
SUBJECT: ADOT SYSTEM FOR THE EVALUATION OF TESTING LABORATORIES	EFFECTIVE DATE: November 5, 2014

1. GENERAL

1.1 This Policy and Procedure Directive specifies the requirements which materials testing laboratories must meet in order to be approved by ADOT to perform sampling and testing activities for the Department.

1.2 This *ADOT System for the Evaluation of Testing Laboratories* incorporates the procedures and requirements of the *AASHTO Accreditation Program (AAP)* in conjunction with *AASHTO R 18, "Establishing and Implementing a Quality Management System for Construction Materials Laboratories"*, as part of the requirements for a laboratory to demonstrate competency in the performance of specific tests on construction materials. Laboratories which are approved by ADOT must obtain and maintain AASHTO accreditation for <u>any</u> AASHTO or ASTM test method specified or referenced by a contract document. In addition, AASHTO accreditation is required for any AASHTO or ASTM test method which an Arizona Test Method modifies.

1.3 On all projects advertised/awarded by ADOT, the materials testing laboratory must satisfy the qualification criteria as specified herein and be approved by ADOT Materials Group prior to performing materials sampling and testing activities for the Department. For Certification Acceptance projects that are advertised/awarded by a local government agency, AASHTO accreditation in applicable test methods is sufficient. Those laboratories submitting asphaltic concrete mix designs must also meet the requirements of *Materials Group Policy and Procedure Directive No. 4, "Asphaltic Concrete Mix Design Proposals and Submittals"*, and be approved by the Materials Group Bituminous Engineer. Approved laboratories will be periodically evaluated to verify compliance with this system. This system is administered by the ADOT Materials Group Quality Assurance Section, under authority delegated by the State Engineer. This system will apply to any laboratory performing sampling and testing activities for the Department, directly or as a subconsultant.

1.4 The *ADOT System for the Evaluation of Testing Laboratories* is revised periodically. The latest version of this Policy and Procedure Directive can be obtained by accessing the ADOT Materials Group website.

2. ADOT SYSTEM CRITERIA

2.1 The following requirements are in addition to Section 3, "AASHTO Accreditation Program Criteria", of the *AASHTO Accreditation Program Procedures Manual for the Accreditation of Construction Materials Testing Laboratories* (hereinafter referred to as the "AAP Procedures Manual"):

2.1.1 **Subsection 3.1 "Quality Management System Criteria"** of the AAP Procedures Manual is modified to add the following:

2.1.1.1 The laboratory shall have and maintain the current ADOT Materials Testing Manual. The manual shall be readily accessible to all laboratory personnel.

2.1.2 **Subsection 3.2 "On-Site Assessment and Quality Management System Evaluation Criteria"** of the AAP Procedures Manual is modified to add the following:

2.1.2.1 Any laboratory performing materials sampling and testing in Arizona, or within 100 miles of its borders, for ADOT projects shall be open for inspection by Arizona Department of Transportation personnel at any time. ADOT Materials Group Quality Assurance Section shall regularly schedule and conduct periodic on-site equipment and procedural inspections at all approved permanently based laboratories. The laboratory shall demonstrate the capability to perform tests according to the current ADOT Materials Testing Manual for those testing services offered under the scope of this system.

2.1.2.2 Approval will be given for those AASHTO/ASTM test methods which the laboratory has obtained AASHTO accreditation and which are successfully demonstrated during the ADOT inspection. Approval will be given for those Arizona Test Methods which modify AASHTO/ASTM methods, if the laboratory has AASHTO accreditation for the AASHTO/ASTM methods, and the Arizona Test Methods are successfully demonstrated during the ADOT inspection. Approval will also be given for unique Arizona Test Methods that are successfully demonstrated during the inspection.

2.1.2.3 A written response to any deficiencies noted during ADOT inspections shall be submitted to the ADOT Materials Group Quality Assurance Engineer within 30 days of notification. **Failure to respond to noted deficiencies within the 30 day limit will be grounds for revocation of ADOT approval.**

2.1.2.4 Laboratory inspections performed by ADOT Materials Group Quality Assurance Section will be conducted according to **Table 1**.

TABLE 1

LABORATORY INSPECTION REQUIREMENTS

TYPE OF LAB	Evaluate personnel, Quality Management System Manual, etc.	**INSPECT Procedures and Equipment on a Regular Schedule or As Needed**	Approve via Acceptance Letter	Include in the ADOT Directory of Approved Testing Labs	Performing Acceptance Sampling and Testing for ADOT: **INSPECT Procedures and Equipment PER PROJECT**	Performing Quality Control Sampling and Testing for the Contractor: **INSPECT Equipment PER PROJECT**
All ADOT Labs Statewide	X	X	X	X		
AASHTO Accredited Independent Labs within Arizona* which are ADOT Approved	X	X	X	X		
Project Labs** within Arizona* of an ADOT Approved Independent Lab					X***	X***
Project Labs** within Arizona* of an out-of-state AASHTO Accredited Independent Lab which is not ADOT Approved	X				X***	X***

* Operating within Arizona, or within 100 miles of Arizona borders.

** Any portable or permanently based lab facility operating under the authority, and AASHTO accreditation of, a main laboratory facility ("parent" lab).

*** The Resident Engineer shall notify the ADOT Materials Group Quality Assurance Engineer in writing to request an inspection (See Subsection 2.1.2.6).

2.1.2.5 To perform materials acceptance or quality control sampling and testing on a project, a lab facility must be located within a reasonable distance from the project site. Project personnel, which may include the Resident Engineer and the Regional Materials Engineer, will ensure that the distance is such that the integrity of the sample is maintained. In addition, the lab must be completely equipped for all phases of project-related materials sampling and testing, as required by the contract specifications.

2.1.2.6 Any Project laboratory, as described in **Table 1**, which is contracted to perform materials acceptance or quality control sampling and testing must be inspected by ADOT Materials Group Quality Assurance personnel at least 10 working days prior to performing the required testing. The Resident Engineer shall notify the ADOT Materials Group Quality Assurance Engineer, in writing, to request the inspection.

2.1.2.7 Any AASHTO accredited independent laboratory within Arizona which is not ADOT approved, which is contracted to perform materials acceptance or quality control sampling and testing must become an ADOT approved laboratory. The laboratory shall contact the ADOT Materials Group Quality Assurance Engineer, in writing, at least 20 working days prior to performing the required testing to request an inspection of the laboratory procedures and equipment. In addition, the personnel, Quality Management System Manual, etc. will also be evaluated.

2.1.2.8 When multiple ADOT projects use the same laboratory for materials acceptance or quality control sampling and testing, the Quality Assurance Engineer will decide if an inspection of the laboratory is necessary for each project.

2.1.2.9 As an addendum to their AAP Quality Management System Manual, each approved lab shall submit, for review and acceptance by ADOT, written policy and procedures that address the following issues:

1. How project laboratories maintain test method and specification compliance while sampling and testing materials for ADOT projects.

2. How inspection and calibration of sampling and testing equipment at project laboratories are performed and documented.

3. How the correlation testing program is performed between the accredited "parent" laboratory and its project laboratories.

2.1.2.10 **Copies of AMRL and CCRL inspection reports and responses to any deficiencies shall be transmitted to the ADOT Materials Group Quality Assurance Engineer within 30 days of receipt of the inspection report.**

2.1.2.11 Additional information regarding laboratory inspections can be found in Series 900 "Materials Quality Assurance Program" of the ADOT Materials Testing Manual, obtained by accessing the ADOT Materials Group website. This website also provides information specifically related to the Laboratory Inspection Program.

2.1.3 **Subsection 3.3 "Proficiency Testing Criteria"** of the AAP Procedures Manual is modified to add the following:

2.1.3.1 The laboratory shall participate in the ADOT Proficiency Sample Program, performing at least those test methods for which ADOT approval has been granted. A written response to any noted deficiencies shall be submitted to the ADOT Materials Group Quality Assurance Engineer within 30 days of notification. **Failure to respond to noted deficiencies within the 30 day limit will be grounds for revocation of ADOT approval.** If a laboratory does not perform testing on two consecutive sets of proficiency samples of the same material type, that laboratory will be removed from the ADOT Proficiency Sample Program entirely. If that laboratory is also an ADOT approved laboratory, it will lose ADOT approval to perform sampling and testing on ADOT projects.

2.1.3.2 **Copies of AMRL and CCRL proficiency sample test result reports and responses to deficiencies shall be transmitted to the ADOT Materials Group Quality Assurance Engineer within 30 days of receipt of the report issued by AMRL or CCRL.**

2.1.3.3 Additional information regarding the ADOT Proficiency Sample Program can be found in Series 900 "Materials Quality Assurance Program" of the ADOT Materials Testing Manual, obtained by accessing the ADOT Materials Group website. This website also provides information specifically related to the Proficiency Sample Program.

2.1.4 **Subsection 3.4 "Personnel Qualification Criteria"** of the AAP Procedures Manual is modified to add the following:

2.1.4.1 **An individual who is responsible for supervising sampling and testing** shall meet the requirements given in **Table 2** for the appropriate field in which sampling and testing is being performed.

2.1.4.2 **Individuals who perform actual sampling and testing** shall meet the requirements given in **Table 3** for the appropriate field in which sampling and testing is being performed, and shall be supervised by an individual who meets the requirements of **Table 2** for the appropriate field in which sampling and testing is being performed.

2.1.4.3 Additional information regarding certification requirements can be obtained from ADOT Materials Group Quality Assurance Section, or by accessing the ADOT Materials Group website.

TABLE 2

REQUIREMENTS FOR SAMPLING AND TESTING SUPERVISOR

Soils and Aggregate	
Field	Laboratory
Arizona Technical Testing Institute (ATTI) "Field" certification plus one of (a) through (g) below.	Arizona Technical Testing Institute (ATTI) "Laboratory Soils/Aggregate" certification plus one of (a) through (g) below.
Asphaltic Concrete	
Field	Laboratory
Arizona Technical Testing Institute (ATTI) "Field" certification plus one of (a) through (g) below.	Arizona Technical Testing Institute (ATTI) "Asphalt" certification plus one of (a) through (g) below.
Concrete	
Field	Laboratory
American Concrete Institute (ACI) "Concrete Field Testing Technician Grade I" certification plus one of (a) through (g) below.	American Concrete Institute (ACI) "Concrete Strength Testing Technician" certification plus one of (a) through (g) below.

(a) Professional Engineer, registered in the State of Arizona, with one year of highway materials sampling and testing experience acceptable to the Department.

(b) Engineer-In-Training, certified by the State of Arizona, with two years of highway materials sampling and testing experience acceptable to the Department.

(c) Obtained a Bachelor of Science Degree in Civil Engineering, Civil Engineering Technology, Construction, or related field acceptable to the Department; and with three years of highway materials sampling and testing experience acceptable to the Department.

(d) Certified by the National Institute for Certification in Engineering Technologies (NICET) in the Construction Materials Testing field as an Engineering Technician (Level III) or higher in the appropriate subfield in which sampling and testing is being performed.

(e) Certified by NICET in the Transportation Engineering Technology field as an Engineering Technician (Level III) or higher in the Highway Materials subfield.

(f) Certified by NICET as an Engineering Technician, or higher, in Civil Engineering Technology with five years of highway materials sampling and testing experience acceptable to the Department.

(g) An individual with eight years of highway materials sampling and testing, and construction, experience acceptable to the Department.

TABLE 3 REQUIREMENTS FOR SAMPLING AND TESTING TECHNICIAN	
Soils and Aggregate	
Field	Laboratory
Arizona Technical Testing Institute (ATTI) "Field" certification.	Arizona Technical Testing Institute (ATTI) "Laboratory Soils/Aggregate" certification.
Asphaltic Concrete	
Field	Laboratory
Arizona Technical Testing Institute (ATTI) "Field" certification.	Arizona Technical Testing Institute (ATTI) "Asphalt" certification.
Concrete	
Field	Laboratory
American Concrete Institute (ACI) "Concrete Field Testing Technician Grade I" certification.	American Concrete Institute (ACI) "Concrete Strength Testing Technician" certification.

2.1.5 **Subsection 3.5 "Additional General Criteria"** of the AAP Procedures Manual is modified to add the following:

2.1.5.1 Copies of a laboratory's notification to or from AASHTO of any major change in its quality management system, capability to perform tests for which it is accredited, laboratory ownership, location (for permanent facilities), managerial personnel, facilities, and any other change which may affect the scope of its accreditation shall be transmitted to the ADOT Materials Group Quality Assurance Engineer within 30 days of when the change occurs.

2.1.5.2 The ADOT Materials Group Quality Assurance Engineer must be notified within 30 days of changes in supervisory and key technical personnel.

2.1.5.3 To be eligible to perform referee testing on ADOT projects as an independent testing laboratory, the laboratory must provide proof to the Department of their independent status by submitting a letter to the ADOT Materials Group Quality Assurance Engineer indicating all individuals and corporations that have ownership of the laboratory. In addition, the letter must indicate that each of the owners of the laboratory is devoid of any ownership in contracting firms or materials suppliers who perform work for the Department.

Paul T. Burch

Paul T. Burch, P.E.
Assistant State Engineer (Acting)
Materials Group

ARIZONA DEPARTMENT OF TRANSPORTATION * MATERIALS GROUP

1221 NORTH 21ST AVENUE PHOENIX, ARIZONA 85009-3740 PHONE (602) 712- 7231

POLICY AND PROCEDURE DIRECTIVE

TO: ALL MANUAL HOLDERS	PPD NO. 20a
SUBJECT: GUIDANCE ON THE USE OF RECLAIMED ASPHALT PAVEMENT (RAP) IN ASPHALTIC CONCRETE	EFFECTIVE DATE: April 19, 2013

1. GENERAL

1.1 Reclaimed asphalt pavement (RAP) may be used in asphaltic concrete provided it is allowed per Specification.

1.2 This Policy and Procedure Directive was developed to provide guidance to those involved in the production of asphaltic concrete containing RAP. It assumes the reader has a general understanding of the requirements for mixtures which do not contain RAP.

1.3 References contained herein to “ARIZ 428” are defined as “Arizona Test Method 428”.

2. TERMS

2.1 Asphaltic concrete with RAP consists of a mixture of virgin aggregate, virgin binder, RAP, and mineral admixture.

2.1.1 Virgin aggregate consists of mineral aggregate not previously used.

2.1.2 Virgin binder consists of asphalt cement not previously used.

2.1.3 RAP consists of salvaged, milled, pulverized, broken, or crushed asphalt pavement. For purposes of the Specification, RAP is made up of two main components: RAP aggregate and RAP binder.

2.1.3.1 RAP aggregate consists of the aggregate portion of the reclaimed asphalt pavement.

2.1.3.2 RAP binder consists of the binder, or asphalt cement, portion of the reclaimed asphalt pavement.

2.2 When the term “aggregate” is used without being further described as “RAP” or “Virgin”, the intended meaning is the total aggregate used in the mixture. Also note that the term “aggregate” is used interchangeably with “mineral aggregate”.

2.3 When the term “binder” is used without being further described as “RAP” or “Virgin”, the intended meaning is the total binder used in the mixture. Also note that the term “binder” is use interchangeably with “bituminous material”, “asphalt cement”, and “asphalt”.

2.4 The specifications are very deliberate in their use of the terms “RAP” and “Virgin” when describing aggregate or binder. Therefore, it is important that the user be familiar with these definitions and read the specifications carefully.

3. LIMITS ON RAP USAGE

3.1 The amount of RAP material allowed in asphaltic concrete is limited by both a maximum RAP aggregate contribution and a maximum RAP binder contribution to the mixture. In addition, production and testing requirements vary depending on the amount of RAP aggregate and RAP binder in the mixture.

3.1.1 A maximum of 25% RAP aggregate, by weight of total aggregate in the mix, may be used in mixes placed in a lower lift (minimum 2” below finished surface). A maximum of 20% RAP aggregate, by weight of total aggregate in the mix, may be used at all other locations.

3.1.2 A maximum of 25% RAP binder, by weight of total binder in the mix, may be used in mixes placed in a lower lift (minimum 2” below finished surface). A maximum of 20% RAP binder, by weight of total binder in the mix, may be used at all other locations.

3.2 When less than or equal to 15% RAP aggregate is used, by weight of the total aggregate in the mix, all RAP material must pass the 1¼ inch sieve.

3.3 When more than 15% RAP aggregate is used, by weight of the total aggregate in the mix, the RAP must be processed into uniform coarse and fine stockpiles meeting the gradation requirements of the specifications, and such that there will be a minimum amount of fines.

3.4 When less than or equal to 15% RAP binder is used, by weight of the total binder in the mix, no testing is required on the RAP binder properties during the mix design process.

3.5 When more than 15% RAP binder is used, by weight of the total binder in the mix, the RAP binder must be extracted, recovered, and tested during the mix design process. Depending on the results of these tests, the grade of virgin binder supplied to the project may need to be different than the grade specified in the bid documents. A different virgin binder

grade may be required to ensure the blend of virgin and RAP binder meets the grade specified in the bid documents. The virgin binder grade delivered to the project shall be as specified in the approved mix design.

3.6 There are no specific restrictions on the source of RAP material for a project. However, the contractor is responsible to determine the suitability of the RAP proposed for use regardless of its source.

4. SAMPLING AND TESTING

4.1 The sampling and testing of asphaltic concrete containing RAP is similar to non-RAP mixtures, with some important differences. These differences deal primarily with aggregate properties and asphalt cement content. For mixtures containing RAP, the RAP binder must be tracked separately from the virgin binder. This requires additional sampling, testing, data collection, and calculations.

4.2 During production of asphaltic concrete, sampling and testing is required on the following materials:

4.2.1 Mineral Aggregates (See Section 5 for details.)

4.2.2 Virgin Binder (See Section 6 for details.)

4.2.3 RAP Material (See Sections 7 and 8 for details.)

4.2.4 Asphaltic Concrete (See Section 9 for details.)

4.3 Additional contractor quality control is required for an asphaltic concrete mixture containing RAP. See the project specifications for specific requirements.

5. SAMPLING AND TESTING OF MINERAL AGGREGATES

5.1 Virgin mineral aggregate will be sampled in accordance with Arizona Test Method 105.

5.2 Requirements for the sand equivalent and uncompacted void content are on the composite of the virgin aggregates only. Samples will be obtained from the cold feed belt prior to the addition of admixture, or from the stockpiles when sampling from the cold feed belt is not possible.

5.3 The requirement for fractured coarse aggregate particles is on the composite of the virgin aggregate and RAP aggregate material. The aggregate material for determining fractured coarse aggregate particles will normally come from an asphaltic concrete sample taken and tested for binder content and gradation in accordance with ARIZ 428. However, if the

engineer determines that excessive breakdown of the aggregate has occurred due to the use of the ignition furnace, the fractured coarse aggregate particles testing will be performed on a composite of RAP aggregate obtained in accordance with ARIZ 428, and virgin mineral aggregate. The virgin mineral aggregate will be obtained from the cold feed belt prior to the addition of admixture, or from the stockpiles when sampling from the cold feed belt is not possible. The virgin aggregate and RAP aggregate shall be batched per Composite #1 in the mix design.

6. SAMPLING AND TESTING OF VIRGIN BINDER

6.1 Virgin binder will be sampled and tested in the same way as it is done for non-RAP mixtures. However, as mentioned in Subsection 3.5, the virgin binder grade required may be different than what is specified in the bid documents to ensure the blend of virgin and RAP binder meet the grade specified. This will be determined during the mix design process. Sample labels shall indicate the actual grade of virgin binder provided to the project.

7. SAMPLING AND TESTING OF RAP MATERIAL FOR GRADATION, MOISTURE CONTENT, AND BINDER CONTENT

7.1 RAP material must be sampled and tested to ensure it meets the gradation requirements in the specifications. The intent of the RAP material gradation requirements is to prohibit the use of oversized (+ 1¼ inch) material, improve consistency, and minimize segregation. RAP material must also be sampled and tested for moisture content and RAP binder content. Virgin binder and RAP binder contents must be tracked separately in order to determine correction factors, validate and/or determine payments for asphalt cement, and to properly apply asphalt price adjustments.

7.2 RAP material will be sampled in accordance with Arizona Test Method 105. The sample shall be split to provide a sufficient amount of material for gradation testing, moisture content testing, and binder content testing. When multiple RAP stockpiles are used, RAP material shall be sampled separately from each stockpile.

7.3 Each RAP stockpile will be sampled and tested for gradation, moisture content, and binder content at a minimum frequency of one sample per lot of asphaltic concrete production. When more than one RAP sample is tested for moisture content and binder content, for a given lot and stockpile, the average of the results will be used.

7.4 Prior to testing the RAP material for gradation and binder content, the weight of the RAP material is recorded and the material is then dried at 140 °F to a constant weight. A higher temperature is not appropriate because it will soften the binder causing the RAP material to break into smaller particles and adhere to the pan. Drying to a constant weight at 140 °F will typically take overnight. The percent moisture content by drying at 140 °F shall be determined and recorded. After drying and determining the moisture content at 140 °F, the material shall be allowed to cool and then be tested for gradation and binder content.

7.5 The gradation of the RAP material will be determined by first dry sieving the material in accordance with Arizona Test Method 240, but utilizing the No. 8 sieve as the smallest sieve. To control breakdown of the particles of salvaged material into smaller size fractions, Arizona Test Method 240 limits the time for shaking the sample to 5 minutes ± 15 seconds. The gradation of the RAP material is then determined in accordance with Arizona Test Method 248 (Alternate #2).

7.6 The RAP binder content, including the determination of moisture content at 290 °F, of each RAP stockpile will be determined in accordance with ARIZ 428.

7.7 The total percent moisture content of the RAP material from each stockpile is determined by adding the percent moisture content by drying at 140 °F (Subsection 7.4) to the percent moisture content by drying at 290 °F (Subsection 7.6).

7.8 The total moisture content and RAP binder content results will be used to determine the total quantity of RAP binder used in each lot, as well as in the calculation of a tank stab correction (See Subsection 9.2.2).

8. RAP BINDER CONTENT CORRECTION FACTOR

8.1 A RAP binder content correction factor will be applied to each RAP binder content result determined in accordance with Subsection 7.6. A correction factor is required for each RAP stockpile and is determined as follows:

8.1.1 At the start of asphaltic concrete production, the first two samples of RAP material from each stockpile will be split and tested for binder content; one split is tested in accordance with ARIZ 428 (Ignition Furnace) and the other split is tested in accordance with AASHTO T 164 (Solvent Extraction). A RAP binder content correction factor will be determined by subtracting the average ignition furnace result from the average solvent extraction result. The appropriate correction factor shall be added to each RAP binder content test result determined on the material from each RAP stockpile in accordance with ARIZ 428 to determine the RAP binder content. At the discretion of the Engineer, the correction factor may be determined prior to the start of asphaltic concrete production provided representative RAP samples are available. A new correction factor may be determined at any time the Engineer believes it is necessary due to a change in material or other circumstances. See Attachment #1 for an example calculation for determining the RAP binder content correction factor.

8.1.2 When splitting RAP material to determine the RAP binder content correction factor for the respective stockpile, it is extremely important that a representative split be obtained because the correction factor will be applied to all RAP binder content test results for that RAP stockpile. To help ensure a good split is obtained the sample should first be reduced to the approximate size required to perform both procedures (ARIZ 428 and AASHTO T 164). Generally, 9000 grams of RAP material from each stockpile will be adequate to obtain the split samples for determining the RAP binder content correction factor. The sample shall be split and each half visually observed to verify that both halves appear similar in composition. One half of the split is then tested by the acceptance laboratory in accordance with ARIZ 428. The other half is sent to the Central Laboratory to have tested accordance with AASHTO T 164. Split samples must be sent to the Central Laboratory as quickly as possible to ensure that the RAP binder correction factor for each RAP stockpile and a subsequent ignition furnace correction (tank stab correction) can be calculated in a timely manner.

Note: ADOT does not currently perform AASHTO T 164. Therefore, the Central Laboratory will send their split of the RAP material to an on-call independent laboratory for the required testing.

9. SAMPLING AND TESTING OF ASPHALTIC CONCRETE

9.1 Asphaltic concrete containing RAP is sampled in the same manner as asphaltic concrete without RAP.

9.2 Testing for gradation, total asphalt content by ignition furnace, effective voids, stability, and compaction for asphaltic concrete containing RAP is done in the same manner as asphaltic concrete without RAP with the following exceptions:

9.2.1 The ignition furnace calibration is performed in accordance with ARIZ 428.

9.2.2 An ignition furnace correction (tank stab correction) must be determined by the Engineer for all mixtures containing RAP. If the correction is greater than 0.1%, it shall be applied to the ignition furnace results. Applying the correction is not optional as is the case for mixtures that do not contain RAP. The tank stab correction is defined as the average difference between the asphalt cement content as measured by the ignition furnace testing and the actual asphalt cement content for the first five lots of production. The “actual” asphalt cement content is determined by adding the virgin asphalt cement content to the RAP binder content, both expressed as a percent of the total mix. See Attachment #2 for an example calculation for determining the tank stab correction when one RAP stockpile is used. See Attachment #3 for an example calculation for determining the tank stab correction when two RAP stockpiles are used.

9.2.3 Asphalt content results for mixtures containing RAP are not subject to referee testing because a tank stab correction cannot be established for referee results.

10. MEASUREMENT AND PAYMENT FOR ASPHALT CEMENT

10.1 Asphaltic cement will be measured by the ton, for each lot of asphaltic concrete accepted, in one of the following ways:

10.1.1 Asphalt cement may be measured by multiplying the average asphalt cement content (from the Mix/Compaction Report) by the total tons of asphaltic concrete in that lot.

10.1.2 Asphalt cement may be measured by adding invoice quantities for virgin binder to the RAP binder used, adjusted as necessary for waste. The invoice quantities should be shown on the hot plant reports and substantiated by certified weights. RAP binder used shall be determined by multiplying the RAP binder content determined in Subsection 7.6 by the number of tons of dry RAP materials used in that lot. The tons of RAP material shall be a measured value (i.e., from a belt scale) rather than a calculated value. The measured tons of RAP material shall be shown on the hot plant report. When multiple RAP stockpiles are used, the RAP quantities and RAP binder contents must be determined separately for each stockpile.

10.2 In no case shall the measured amount of asphalt cement for payment be greater than the quantity determined in Subsection 10.1.2 above, adjusted for waste.

11. OTHER CONSIDERATIONS

11.1 Asphalt cement penalties and price adjustments only apply to the virgin binder in the mixture.

11.2 During production, the percent RAP aggregate shall be maintained to within plus 2 percent and minus 5 percent of the mix design values, not to exceed the maximum allowed by specification. When more than one RAP stockpile is used, this tolerance shall apply to the total percent RAP aggregate in the mixture, as well as the percent RAP aggregate from each stockpile.

11.3 For mixes containing RAP, an asphalt cement tank shall be dedicated to the project for each shift of asphalt concrete production. This is necessary in order to accurately track virgin binder usage for the project and to establish an accurate tank stab correction.

11.4 At least five days prior to the start of asphaltic concrete production, a copy of the mix design and representative samples of the virgin mineral aggregate, RAP aggregate, mineral admixture, and asphalt cement used in the mix design must be submitted by the contractor for calibration of the ignition furnace, and determination of aggregate properties. A minimum of 40 pounds of representative RAP material and a minimum of 10 pounds of solvent extracted RAP aggregate shall be submitted. If the RAP is fractionated, the RAP material and RAP aggregate from each stockpile shall be kept separate. All materials must be submitted in sufficient quantity to perform an ignition furnace calibration by both the acceptance lab and a referee lab if

necessary. If referee testing is performed, the referee testing laboratory will only be required to perform the ignition furnace calibration to determine a minus No. 200 correction factor.

11.5 The contractor shall provide daily documentation of the weight, determined by a belt scale, and proportion of material from each individual RAP stockpile incorporated into the mix. The percent moisture content of the RAP material from each stockpile shall also be determined and provided daily by the contractor.

11.6 A pre-activity meeting shall be held approximately two weeks prior to the start of paving. The agenda should include discussion items dealing with the production of asphaltic concrete containing RAP.

Bill Hurguy, P.E.
Assistant State Engineer
Materials Group

Attachments (3)

Project Number: F-011-1(11)

TRACS Number: H011101C

RAP Material Type: Fine

Sample # 1 Sampled By: Barb B. Que Sampled From: Stockpile

Date Sampled: 04/22/13 Time Sampled: 9:25

Sample # 2 Sampled By: Jack Frost Sampled From: Stockpile

Date Sampled: 04/23/13 Time Sampled: 14:50

RAP BINDER CONTENT CORRECTION FACTOR
(Ignition Furnace vs. Solvent Extraction)

Sample #	RAP Binder Content (%)		RAP Binder Content Correction Factor
	Ignition Furnace (ARIZ 428)	Solvent Extraction (AASHTO T164)	(Average Solvent Extraction Value) Minus (Average Ignition Furnace Value)
1	7.73	6.51	
2	8.31	7.28	
Average	**8.020**	**6.895**	**- 1.13**

Notes:
1) Shaded fields contain data input by the user. All other numerical fields are calculated values.
2) The RAP binder contents and RAP binder content correction factor in this example are high due to the recycling of ARAC.

EXAMPLE RAP BINDER CONTENT CORRECTION FACTOR DETERMINATION

EXAMPLE IGNITION FURNACE CORRECTION (TANK STAB CORRECTION) DETERMINATION

(WHEN ONE RAP STOCKPILE IS USED)

A	B	C	D	E	F	G	H	I	J	K	L	M	N	O	P
							Only if two RAP stockpiles are used								
Lot #	Tons of Asphaltic Concrete in the Lot (including waste)	Tons of Virgin Binder in the Lot	Tons of Fine RAP Material in the Lot	Total Percent Moisture Content of Fine RAP Material	Tons of Dry Fine RAP Material used in the Lot	Fine RAP percent binder content from lab (corrected)	Tons of Coarse RAP Material in the Lot	Total Percent Moisture Content of Coarse RAP Material	Tons of Dry Coarse RAP Material used in the Lot	Coarse RAP percent binder content from lab (corrected)	Percent Binder Content from Ignition Furnace (Lot average from Pay Factor report)	Tons of RAP Binder used in the Lot	Actual Tons of Total Binder used in the Lot (RAP plus Virgin)	Calculated Total Actual Percent RAP Binder and Virgin Binder used in the Lot	Difference between the Percent Binder Content from the Ignition Furnace Pay Factor Report and the Calculated Total Actual Percent Binder
1	1370.78	59.76	205.47	3.14	199.02	6.60					5.20	13.14	72.90	5.32	-0.12
2	2483.52	114.10	371.27	2.98	360.21	7.18					5.43	25.86	139.96	5.64	-0.21
3	1679.76	78.11	252.96	3.57	243.93	7.27					5.05	17.73	95.84	5.71	-0.66
4	1349.10	54.94	202.40	3.42	195.48	6.89					4.91	13.47	68.41	5.07	-0.16
5	3280.36	135.20	489.01	3.86	470.13	6.87					4.95	32.30	167.50	5.11	-0.16
														Tank Stab Correction =	**-0.26**

Notes:

1) Shaded columns contain data input by the user. All other columns are calculated values.
2) Column B is the tons of asphaltic concrete produced for the given lot.
3) Column C is the tons of virgin binder in the lot (per the hot plant report, verified by certified weights).
4) Column D is the tons of fine RAP material used in the lot (if only one RAP stockpile is used, the tons of RAP used is entered in Column D).
5) Colunm E is the total percent moisture content of the fine RAP material (the sum of percent moisture contents from drying at 140 °F and 290 °F).
6) Column F is the tons of dry fine RAP material used in the given lot. F = D x [(100-E) / 100]
7) Column G is the percent binder content of the fine RAP material, as determined by ARIZ 428 and corrected by the RAP binder content correction factor (see Attachment #1).
8) Columns H, I, J and K are used in the same way as columns D, E, F and G when a second RAP stockpile is used (See Attachment #3).
9) Column L is the average percent binder content in the lot as measured by the ignition furnace (ARIZ 428).
10) Column M is the tons of RAP binder used in the lot. M = [{(G x F) / 100} + {(K x J) / 100}]
11) Column N is the actual tons of total binder (tons of RAP binder plus tons of virgin binder) used in the lot. N = C + M
12) Column O is the calculated total actual percent binder content used in the lot. O = (N / B) X 100
13) Column P is the difference between the percent binder content measured by the ignition furnace and the calculated total actual percent binder content. P = L - O
14) The tank stab correction is the average of the five values in Column P.
15) The above values include waste at the plant and grade. Waste must be deducted prior to payment for binder and mix.
16) This example is for a mixture with one RAP stockpile. An example of a tank stab correction when two RAP stockpiles are used is given in Attachment #3.

EXAMPLE IGNITION FURNACE CORRECTION (TANK STAB CORRECTION) DETERMINATION

(WHEN TWO RAP STOCKPILES ARE USED)

A	B	C	D	E	F	G	H	I	J	K	L	M	N	O	P
							Only if two RAP stockpiles are used								
Lot #	Tons of Asphaltic Concrete in the Lot (including waste)	Tons of Virgin Binder in the Lot	Tons of Fine RAP Material in the Lot	Total Percent Moisture Content of Fine RAP Material	Tons of Dry Fine RAP Material used in the Lot	Fine RAP percent binder content from lab (corrected)	Tons of Coarse RAP Material in the Lot	Total Percent Moisture Content of Coarse RAP Material	Tons of Dry Coarse RAP Material used in the Lot	Coarse RAP binder content from lab (corrected)	Percent Binder Content from Ignition Furnace (Lot average from Pay Factor report)	Tons of RAP Binder used in the Lot	Actual Tons of Total Binder used in the Lot (RAP plus Virgin)	Calculated Total Actual Percent RAP Binder and Virgin Binder used in the Lot	Difference between the Percent Binder Content from the Ignition Furnace Pay Factor Report and the Calculated Total Actual Percent Binder
1	1390.19	62.31	145.53	2.07	142.52	4.65	144.90	0.57	144.07	3.57	5.12	11.77	74.08	5.33	-0.21
2	1896.32	86.12	191.88	3.34	185.47	4.51	191.89	1.26	189.47	3.58	5.24	15.15	101.27	5.34	-0.10
3	1099.05	48.30	109.68	3.37	105.98	4.53	111.61	1.58	109.85	3.49	5.04	8.63	56.93	5.18	-0.14
4	2195.36	98.48	218.50	2.83	212.32	4.47	220.03	1.39	216.97	3.85	5.21	17.84	116.32	5.30	-0.09
5	2248.38	102.02	217.15	2.99	210.66	4.73	228.20	1.60	224.55	4.01	5.19	18.97	120.99	5.38	-0.19
													Tank Stab Correction =		**-0.15**

Notes:

1) Shaded columns contain data input by the user. All other columns are calculated values.
2) Column B is the tons of asphaltic concrete produced for the given lot.
3) Column C is the tons of virgin binder in the lot (per the hot plant report, verified by certified weights).
4) Column D is the tons of fine RAP material used in the lot (if only one RAP stockpile is used, the tons of RAP used is entered in Column D).
5) Colunm E is the total percent moisture content of the fine RAP material (the sum of percent moisture contents from drying at 140 °F and 290 °F).
6) Column F is the tons of dry fine RAP material used in the given lot. F = D x [(100-E) / 100]
7) Column G is the percent binder content of the fine RAP material, as determined by ARIZ 428 and corrected by the RAP binder content correction factor (see Attachment #1).
8) Columns H, I, J and K are used in the same way as columns D, E, F and G when a second RAP stockpile is used.
9) Column L is the average percent binder content in the lot as measured by the ignition furnace (ARIZ 428).
10) Column M is the tons of RAP binder used in the lot. M = [{(G x F) / 100} + {(K x J) / 100}]
11) Column N is the actual tons of total binder (tons of RAP binder plus tons of virgin binder) used in the lot. N = C + M
12) Column O is the calculated total actual percent binder content used in the lot. O = (N / B) X 100
13) Column P is the difference between the percent binder content measured by the ignition furnace and the calculated total actual percent binder content. P = L - O
14) The tank stab correction is the average of the five values in Column P.
15) The above values include waste at the plant and grade. Waste must be deducted prior to payment for binder and mix.
16) This example is for a mixture with two RAP stockpiles. An example of a tank stab correction when one RAP stockpile is used is given in Attachment #2.

ARIZONA DEPARTMENT OF TRANSPORTATION * MATERIALS GROUP

1221 NORTH 21ST AVENUE PHOENIX, ARIZONA 85009-3740 PHONE (602) 712 - 7231

POLICY AND PROCEDURE DIRECTIVE

James P. Delton
Assistant State Engineer

TO: ALL MANUAL HOLDERS	PPD NO. 21
SUBJECT: SAMPLING, TESTING, AND ACCEPTANCE OF GLASS BEADS (SPHERES) FOR STRIPING MATERIALS	EFFECTIVE DATE: January 6, 2011

1. GENERAL

1.1 This Policy and Procedure Directive outlines the sampling and testing of glass beads used in conjunction with striping materials.

1.2 The term “glass beads” shall be synonymous with the term “glass spheres”.

2. ACCEPTANCE OF GLASS BEADS

2.1 Acceptance of glass beads shall be determined by the test results of samples obtained for pre-approval at the striping contractor’s yard, or field samples taken from the project.

3. SAMPLING

3.1 Sampling of glass beads must be for an active ADOT project.

3.2 For pre-approval of glass beads, the Structural Materials Testing Section will obtain a sample from each lot at the striping contractor’s yard as requested by the striping contractor.

3.2.1 One 50 pound bag of glass beads, or a minimum 1 gallon sample taken from a “super sack” as specified in paragraph 3.2.2, shall be sampled for each lot.

3.2.2 When sampling a lot consisting of super sacks, no less than four super sacks shall be sampled, and the samples combined to make one sample.

3.3 A field sample shall consist of one 50 pound bag or a minimum one gallon sample taken from the striping truck for each lot. Each field sample must be identified with the manufacturer's lot number. When sampling from the striping truck, the sample shall be obtained from the drop nozzle after 500 feet of striping has been placed.

3.3.1 Unless the inspector suspects contamination of the glass beads, no field samples will be required for pre-approved lots.

4. TESTING OF GLASS BEADS

4.1 Glass beads shall be tested in accordance with the applicable requirements of Section 704, 708, and 709 of the ADOT specifications, or other governing documents.

5. STRUCTURAL MATERIALS TESTING SECTION RESPONSIBILITIES

5.1 For each lot of glass beads that is to be pre-approved, Structural Materials Testing Section will perform the sampling and testing.

5.1.1 A test report with the lot number will be issued for each project the glass beads are to be used for.

5.1.2 Upon completion of testing for pre-approval, Structural Materials Testing Section will provide the striping contractor with a copy of the test results.

5.1.3 Structural Materials Testing Section will keep a log/file of all lots tested.

5.2 For glass beads that have not been pre-approved, Structural Materials Testing Section will test field samples submitted by the project.

5.2.1 The issuance of a test report and the maintaining of a log/file of all lots tested shall be performed as specified in paragraphs 5.1.1 and 5.1.3.

5.2.2 Structural Materials Testing Section will immediately notify the project of any failing test results.

6. PROJECT RESPONSIBILITIES

6.1 The project must receive a Certificate of Compliance and/or a Certificate of Analysis, as required, for each lot of glass beads from the striping contractor before striping can begin. Certificates of Compliance and Certificates of Analysis must conform to the requirements of Subsection 106.05 of the Specifications.

6.1.1 For glass beads that have been pre-approved, the striping contractor shall also provide the project with a copy of the Structural Materials Testing Section test results.

6.2 The project personnel will contact Structural Materials Testing Section to determine if the glass beads have been pre-approved.

6.2.1 If the glass beads have not been pre-approved, the project will obtain a sample of the beads, as specified in paragraph 3.3, and submit the sample to Structural Materials Testing Section for testing.

James P. Delton, P.E.
Assistant State Engineer
Materials Group

ARIZONA DEPARTMENT OF TRANSPORTATION * MATERIALS GROUP

1221 NORTH 21ST AVENUE PHOENIX, ARIZONA 85009-3740 PHONE (602) 712 - 7231

POLICY AND PROCEDURE DIRECTIVE

James P. Delton
Assistant State Engineer

TO: ALL MANUAL HOLDERS	PPD NO. 22
SUBJECT: QUALIFICATION AND SPECIFICATION REQUIREMENTS FOR THE MANUFACTURING OF PRECAST/PRESTRESS CONCRETE BRIDGE MEMBERS	EFFECTIVE DATE: May 3, 2011

1. GENERAL

1.1 This Policy and Procedure Directive outlines the requirements for the manufacturing of Precast/Prestress concrete structural bridge members for the use on ADOT projects. These requirements are used in conjunction with, and in addition to, ADOT Specifications.

1.2 The manufacturer must designate in writing, a competent English-speaking superintendent or foreman(s) responsible for the manufacturing of bridge members during all phases of construction. The designee(s) must be experienced with the work being performed and capable of reading and understanding all pertinent contract documents. The manufacturer must ensure that the designee(s) is available at all times.

1.3 The manufacturer shall give the constant attention necessary to facilitate the production of concrete bridge members, and shall cooperate with the Structural Materials Testing Section inspectors at all times. All bridge members that do not conform to the requirements of the contract and approved drawings will be considered unacceptable.

1.4 ADOT Materials Group, Structural Materials Testing Section, will maintain an "Approved Precast/Prestress Manufacturers List" on its website. The approved manufacturer's name, address, and phone number will be included on that list. Only the manufacturers who are on the "Approved Precast/Prestress Manufacturers List" will be allowed to manufacture bridge members for ADOT construction projects.

2. SAFETY

2.1 Working in a Precast/Prestress manufacturing plant is inherently very hazardous because of the large tensioning forces, debris, heavy equipment, etc., necessary to the operations. The inspector(s) shall comply with all safety requirements at each plant, and shall take any steps they deem necessary for safety. All manufacturers shall comply with current OSHA requirements.

3. MATERIALS

3.1 All materials used in the manufacturing of Precast/Prestress bridge members shall meet the requirements shown on the approved shop drawings and shall conform to ADOT Specifications and other governing documents.

3.2 At no time will materials with chlorides be allowed to be incorporated into any Precast/Prestress bridge member.

3.3 A Certificate of Compliance or a Certificate of Analysis conforming to the requirements of Subsection 106.05 of the ADOT Specifications shall be submitted for all specified and applicable materials subject to the approved shop drawings prior to their incorporation into a Precast/Prestress bridge member. Such materials include, but are not limited to: reinforcing steel, prestress cable strand, bearing plates, embed materials, inserts, anchor plates, epoxy coated or galvanized materials, and mechanical lifting devices. Materials that fail to have the required certification will not be allowed.

3.4 All welding shall be performed by a welder certified for the type of welding required. The manufacturer shall submit the welding certifications to the Structural Materials Testing Section upon request.

4. PLANT AND PERSONNEL CERTIFICATIONS

4.1 All Precast/Prestress concrete structural bridge members shall be manufactured in a plant certified by the Precast/Prestress Concrete Institute (PCI). The manufacturer shall be, at a minimum, certified for Product Group “B”- Bridge Products, Category B4.

4.2 Erection of Precast/Prestress bridge members shall be performed by a contractor, manufacturing plant, or erector which has an individual on staff who has attended and received a “Certification of Completion” from the PCI “Industry Erection Standards School” or is certified by PCI as a “Certified Field Auditor”.

4.3 All plant and personnel certifications must be maintained throughout the production of all Precast/Prestress bridge members. Production will immediately stop if at any time the manufacturer’s certification is revoked, regardless of the status of completion of contracted work. Production will not be allowed until certification has been re-established.

4.4 The manufacturer shall supply the Department with documentation of Plant Certifications and Personnel Certifications, and a copy of the plant’s Quality Systems Manual (QSM). The manufacturer must provide the Department all documentation of any changes to the QSM or certified personnel within ten days.

4.5 The manufacturer must have a QC Manager or Engineer, who is certified by PCI as QC Level II or higher.

5. PLANT QUALITY CONTROL

5.1 Fabrication Details

5.1.1 The manufacturer shall submit fabrication details along with the concrete mix design(s) to the Structural Materials Testing Section for approval.

5.1.2 The fabrication details shall contain at the minimum:

a) Concrete strength requirements.
b) Method of concrete placement.
c) Method of concrete vibration.
d) Method of curing.
e) Tensioning method and calculations, including stressing jacks and pumps, gauge pressure values and theoretical elongations.
f) De-tensioning method.
g) Concrete finish requirements and method of finishing.
h) Storage method.

5.1.3 When Requests for Information (RFI) are submitted to the ADOT Engineer, a copy of the RFI shall also be submitted to the Structural Materials Testing Section for informational purposes only.

5.2 Tensioning Operations

5.2.1 Stressing operations shall comply with Section 602 of the ADOT Specifications. Stressing will be accomplished by stressing single strands or by multiple cable tensioning. Stressing gauges, jacks, and other related equipment shall be calibrated annually, or more frequently if necessary. The manufacturer shall supply calibration reports when requested by the Department.

5.2.2 No more than one splice chuck may be used on a cable strand. Splice chucks will not be allowed within the member. When multiple cable tensioning is employed, the use of splice chucks shall be limited to ten percent of the cable strand to be tensioned or all cable strands to be tensioned.

5.2.3 Each plant shall be required to supply load cells to measure force on each production bed as directed by the Department. This may include load cells placed on cable strand between chucks and the dead men (anchorage bulkheads) on both straight and harped strands, at both the live and dead ends. Load cells shall be used as necessary to monitor the gauge pressure during stressing operations, abutment rotation, and bed shortening. Load cells must be calibrated annually, or more frequently if necessary.

NOTE: The intent is not to place load cells between the stressing chucks and the anchorage on an every day basis unless loss of force is suspected, but rather to verify stressing forces for each production bed. When all loses have been verified for each production bed and stressing values are within tolerances, load cells will be used daily as needed to monitor stressing forces of each stressing jack. Periodically, load cells will be placed between strand chucks and anchorage as verification.

5.2.4 All cable strands must be placed within 1/4 inch of the strand locations indicated on the approved shop drawings. All hold downs and cable locations shall be clearly marked on the approved drawings.

5.2.5 At no time shall a cable strand which has been previously stressed and used outside a Precast/Prestress product or member be used at a later time within another Precast/Prestress member.

5.2.6 No more than one broken wire will be allowed in a single strand.

5.2.7 Elongations will be measured to the nearest 1/8 inch.

5.2.8 Cable strand shall be free of deleterious materials such as release agents, oils, grease, dirt, mud, or other foreign matters. Any cable found in such condition will be cleaned or removed, based on the inspector's observations.

5.2.9 Harped strand shall be tensioned from both the live and dead ends, except for the following:

a) If one member is to be produced.
b) If multiple strand tensioning is used and cables are vertically displaced into the correct height. Load cells must be used to verify the force.
c) If load cell verifies force after stressing from the live end.

5.2.10 At no time will stressing operations exceed 80% of minimum ultimate tensile strength for the cable strand as listed in approved drawings or Section 602 of the ADOT Specifications.

5.2.11 Initial stressing force will not exceed 25% of the final force.

5.2.12 De-tensioning of cables will not be performed until concrete test cylinders indicate release strength has been attained. De-tensioning will be performed in a manner that keeps the prestressing forces nearly symmetrical about the vertical axis of the product and:

a) Minimizes shock to the member.
b) Minimizes movement against restrained items such as forms, inserts and hold downs.
c) Prevents overstressing or damaging members.
d) Prevents shock and thermo-cracking that may be caused by using accelerated curing such as steam or radiant heat.
e) De-tensioning must be performed immediately after curing and the removal of forms, curing blankets, tarps, or plastic coverings while the concrete is warm and moist.

5.3 Concrete Operations

5.3.1 Concrete mix designs shall be submitted and comply with the requirements of ADOT Materials Policy and Procedure Directive No. 15 “Submittal and Approval of Portland Cement Concrete Mix Designs”, Section 1006 of the ADOT Specifications, and the requirements listed herein. Calibration reports for batch plants scales and measuring devices shall be supplied to ADOT when requested.

5.3.2 All concrete used in the production of Precast/Prestress bridge members at the manufacturer’s plant or purchased from a Ready Mix supplier shall be batched with load cell indicating devices providing a digital readout and printed weights. Printed copies must be available when requested by ADOT.

5.3.3 The rate of concrete placement and consolidation shall be such that the formation of cold joints within monolithic sections of any bridge member will not occur, but at no time shall concrete placement be less than 25 cubic yards per hour.

5.3.4 Accelerated curing shall not commence until one hour after initial set or three hours after placement of concrete, whichever is longer. Initial set will be determined in accordance with AASHTO T197 and the results submitted with each mix design.

5.3.5 Concrete test cylinders shall be cured with, and in the same manner, as the bridge member being manufactured.

5.3.6 The concrete temperature during accelerated curing shall not exceed 170 degrees F. The manufacturer shall have a temperature measuring device(s) that allows the

Department to monitor the concrete curing temperature at all times. A temperature measuring device shall be placed in each member. The location of each temperature measuring device will be chosen by the Department. The enclosure around each bridge member shall be adequate to ensure a consistent concrete curing temperature. The difference in the concrete curing temperature at the ends of each bridge member shall be no more than 20 degrees F. When box girders or voided slab lengths are less than 60 feet, the concrete curing temperature will be measured on every other bridge member. The manufacturer shall supply a report of the concrete curing temperatures for each concrete casting.

NOTE: It is intended that the curing enclosure procedure(s) be established such that the difference in the concrete curing temperature at the ends of each bridge member is no more than 20 degrees F. Once the curing enclosure procedure is established, the concrete curing temperature will be monitored at one location for each bridge member per casting, with the concrete curing temperature at the end of each bridge member being verified periodically.

5.3.7 When the ambient temperature falls below 50 degrees F, steam or radiant heat may be used to keep the enclosure at a temperature of not more than 90 degrees F until the accelerated curing period begins.

5.3.8 When ready mix trucks are used to mix concrete, the truck must be certified per ADOT Materials Policy and Procedure Directive No. 7, “Inspection of Concrete Batch Plants and Concrete Mixers Trucks”.

5.3.9 When a concrete mix contains “Silica Fume”, a curing plan must be submitted for approval.

5.3.10 When concrete placement is interrupted by rain, the forms shall be covered with tarps or plastic. If it is determined that concrete placement can proceed during rain, tarps or plastic shall be used to cover the forms ahead of and behind the concrete placement.

5.3.11 Self Consolidating Concrete (SCC)

5.3.11.1 Concrete must be able to flow under its own weight and completely fill the formwork, even in the presence of dense reinforcement, without the need of any vibration, while maintaining homogeneity. Placement is to be accomplished in one lift, with the placement equipment within 15 feet of the rolling edge that the SCC creates.

5.3.11.2 Trial mixes will be observed by an ADOT representative. Trial mixes may include an inverted slump spread test, L-box, J-box, J-ring, Column Segregation test, or other tests as deemed necessary by the Department for the concrete mix approval. In addition the following is required:

a) All admixtures must be on the ADOT Approved Products List (APL).
b) Each mix will include a spread range of ± 3”.
c) The use of a Viscosity Modifying Agent (VMA) will be identified for each mix.
d) The Visual Stability Index (VSI) shall be determined for each member being produced.

5.3.11.3 Concrete strength test cylinders shall be fabricated in the following manner:

a) The concrete strength test cylinders will be fabricated in accordance with AASHTO T23 except the molds shall be filled with concrete in one lift to the rim. The concrete shall not be dropped into the mold from more than six inches above the rim. The rim shall be struck off and the lid placed on the test mold.

5.3.11.4 Concrete unit weight and air content tests shall be performed in the following manner:

a) The unit weight and air content tests shall be performed in accordance with AASHTO T121 and AASHTO T152, respectively, except the unit weight/air content bowl shall be filled in one lift to the rim. The concrete shall not be dropped into the test bowl from more than six inches above the rim. The rim shall be struck off and the testing completed.

5.4 Plant Operations

5.4.1 The manufacturer shall give the Structural Materials Testing Section a minimum of one week written notification before production may begin. The manufacturer shall supply a written schedule of the date and time for the start of production along with scheduled times for inspection and a pour schedule with the product ID or marked number for casting. It may be advisable to have a meeting between the manufacturer’s QC Manager, Production Manager, and Structural Materials Testing Section personnel to discuss scheduling and potential issues regarding the bridge members to be manufactured.

5.4.2 The manufacturer shall give a minimum of one week written notice to the Structural Materials Testing Section prior to delivery of bridge members for final inspection and approval.

5.4.3 When lifting Precast/Prestress bridge members from the production bed, setting in storage, loading for delivery, or erecting bridge members at the project, each bridge member will be lifted from the lifting points in a manner that will not cause structural damage to the bridge member due to stresses, torsion, or other forces.

5.4.4 Precast/Prestress members shall be stored on suitable supports placed on level, well compacted material with adequate drainage. Bridge members shall be stored in a manner that will prevent sweeps or damage. When requested by the Department, the manufacturer shall re-set any bridge member that is not level.

5.4.4.1 Unless bridge members have been preapproved, they must be stored in a manner that allows the inspector full access around each member to perform inspections.

5.4.5 When Precast/Prestress bridge members are to be stored for extended periods, the manufacturer shall coordinate with the general contractor to address any potential camber issues. The Structural Materials Testing Section shall be given written notification of precautions taken.

5.4.6 All minor repairs, such as bottom corner spalls and hold-down holes, shall be made with a “High Strength, Non-Shrink” grout which is listed on the Department’s APL. Prior to patching, hold-down holes must be the cleaned of deleterious materials, grease, oil, and laitance. All repairs must match the color of the concrete being repaired. Patching materials used shall be free of chlorides and meet or exceed the 28-day concrete strength requirement(s) shown on the approved shop drawings. Cracks at the end of girders shall be pressure injected with an epoxy which is listed on the APL.

5.4.7 All major repairs will require the submittal of a repair procedure for review and approval. Examples of a major repair are: exposed cable strand, concrete voids, missing inserts or pipes, and required projected strand that has been cut off. The manufacturer shall notify the Department immediately of these or other defects before submitting a repair procedure. All repairs must match the color of the concrete being repaired. Patching materials used shall be free of chlorides and meet or exceed the 28-day concrete strength requirement(s) shown on the approved shop drawings.

5.4.8 Within one week after the production of a bridge member, the manufacturer shall submit a post-pour checklist report to the Structural Materials Testing Section. All dimensions shall meet the requirements given in Subsection 601-4.02 of the ADOT Specifications.

5.4.8.1 The following items shall be listed in the checklist report:

a) Lengths.
b) Widths.
c) Heights.
d) Camber (camber must be measured within twenty-four hours after de-tensioning).
e) Sweeps.
f) Insert and imbed locations.
g) Projected strand locations.
h) Lifting device locations.
i) Damage requiring a repair procedure submittal.
j) Patched hold-down holes.

6. STRUCTURAL MATERIALS TESTING SECTION RESPONSIBILITIES

6.1 The Structural Materials Testing Section will review all Precast/Prestress concrete mix designs and fabrication details. Upon review and approval, Structural Materials Testing Section will forward a copy of the approved mix design and fabrication details to the manufacturer and the construction project office.

6.2 The Structural Materials Testing Section will sample and test reinforcing steel, prestress cable strand, aggregates, concrete (for release strength and 28-day strength), and other materials as necessary.

6.3 The Structural Materials Testing Section will perform the inspection of tensioning and de-tensioning operations, reinforcing steel placement, void placement, insert and imbed placement, and concrete placement.

6.4 The Structural Materials Testing Section will approve, for delivery, all bridge members which meet the Specifications. All bridge members approved will be stenciled “ADOT”.

7. PROJECT RESPONSIBILITIES

7.1 The project will supply the Structural Materials Testing Section with a set of the approved shop drawings. The size of the drawings shall be 22” x 34”.

7.2 The project will verify with the Structural Materials Testing Section, the quantity of bridge members that have been produced for partial payment.

7.3 The project will notify Structural Materials Testing Section of any RFI’s or changes to the approved drawings.

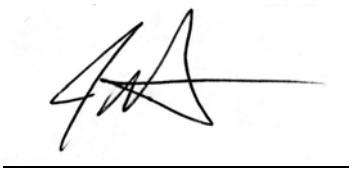

James P. Delton, P.E.
Assistant State Engineer
Materials Group

ARIZONA DEPARTMENT OF TRANSPORTATION * MATERIALS GROUP

1221 NORTH 21ST AVENUE PHOENIX, ARIZONA 85009-3740 PHONE (602) 712 - 7231

POLICY AND PROCEDURE DIRECTIVE

Bill Hurguy
Assistant State Engineer

TO: ALL MANUAL HOLDERS	P.P.D. NO. 23
SUBJECT: REQUIREMENTS FOR THE USE OF WARM MIX ASPHALT (WMA) TECHNOLOGIES IN ASPHALTIC CONCRETE	EFFECTIVE DATE: September 28, 2012

1. GENERAL

1.1 This Policy and Procedure Directive outlines the requirements for the addition of Warm Mix Asphalt (WMA) technologies in dense-graded asphaltic concrete mixes (ADOT specifications Section 416 and Section 417). These requirements are used in conjunction with, and in addition to, ADOT specifications.

1.2 Warm Mix Asphalt (WMA) is the generic term used to describe the reduction in production, placement, and compaction temperatures, achieved through the application of one, or a combination of several WMA technologies. For purposes of the ADOT specifications, WMA is defined as asphaltic concrete that is produced within the temperature range of 215 to 275 °F. WMA can be produced by one or a combination of several ADOT approved WMA technologies including plant water foaming processes, mineral additives, and chemical additives.

1.3 WMA technologies may be used at the contractor's option provided all requirements of the specifications are met and the WMA technology is approved by ADOT for use in asphaltic concrete. WMA technologies may be used to produce WMA as described above, or may be used in standard asphaltic concrete mixes as a compaction aid or as a component to allow workability in long haul applications.

2. WARM MIX ASPHALT TECHNOLOGY APPROVAL PROCESS

2.1 WMA technologies must be approved by ADOT Materials Group for use in production of asphaltic concrete.

2.2 The "Approved Warm Mix Asphalt (WMA) Technologies List" is maintained by ADOT Materials Group, Pavement Materials Testing Section. The current approved list is available on the Materials Group homepage through the ADOT intranet (ADOTNet) and the ADOT internet website.

2.3 The following requirements must be met before a WMA technology will be added to the "Approved Warm Mix Asphalt (WMA) Technologies List":

2.3.1 The WMA technology must be a recognized WMA technology with successful projects constructed nationally, with production of at least 100,000 tons of WMA produced and placed on State DOT highways.

2.3.2 The WMA technology manufacturer must submit documentation from a minimum of three construction projects using the WMA technology on State DOT highways. The documentation must include a mix design with mechanical property test results and the Quality Control/Quality Assurance test results measured during production for each project. The documentation must include DOT contacts and phone numbers, product name and supplier, dates of construction, and the location and highway for each project submitted.

2.3.3 The WMA technology manufacturer must provide documentation and test results showing the effect that the WMA technology has on the rheological properties of virgin asphalt binders beyond such time needed to produce, place, compact, and allow the WMA mixture to cool. Documentation must include asphalt binder performance grade test data over the range of WMA technology percentages recommended by the WMA technology manufacturer and used on past projects.

2.3.4 On a project where WMA is allowed by specification, the WMA technology manufacturer must partner with a contractor and an ADOT Construction District/Project to construct a test section, using the WMA technology. The WMA technology representative must be present for the construction of the test section. The WMA test section must be a separate Lot and the tonnage must be at least 1000 tons, but less than 2000 tons. The Engineer must approve the location of the test section. During construction of the test section, the WMA must meet all ADOT construction acceptance specifications and the test section must show successful performance after construction.

2.3.5 Requests to be included on the “Approved Warm Mix Asphalt (WMA) Technologies List” must be accompanied with the required documentation, and shall be submitted in electronic format (pdf) to the Pavement Materials Testing Engineer at “WMA@azdot.gov”.

2.3.6 ADOT Materials Group will make the final decision on the approval of WMA technologies.

3. MIX DESIGN REQUIREMENTS FOR WMA MIX DESIGNS

3.1 When a WMA technology is used in the mixture, all specified mix design requirements shall apply to the development of the asphaltic concrete mix design. With the exception of Immersion Compression Testing (Arizona Test Method 802), the mix design may be developed without the WMA technology for all mix design requirements.

3.2 If the contractor, supplier, or WMA technology representative recommends that a full mix design be performed to include the WMA technology, the mix design shall be performed in accordance with the WMA manufacturer's recommended laboratory mixing and laboratory compaction temperatures.

3.3 When a full mix design, including Immersion Compression testing, is performed with the WMA technology, the WMA technology must be added to the mix before testing. The WMA technology must be added to the mix in accordance with the specific type of technology and the recommendations in the National Cooperative Highway Research Program (NCHRP) Report 691 "Mix Design Practices for Warm Mix Asphalt", Appendix A, Section 7. The WMA technology shall be added at the rate anticipated to be used in production of asphaltic concrete.

3.4 Immersion Compression testing shall be performed in accordance with ARIZ 802 (as modified below) with and without the WMA technology in the mix design testing. The test results, both with and without the WMA technology, shall meet the minimum requirements of the specifications and shall be reported in the mix design.

3.4.1 Subsection 3(c) of ARIZ 802 is revised to read:

3.4.1.1 The temperature of the asphalt, aggregate, and mineral admixture at the time mixing begins shall be in accordance with the following:

3.4.1.1.1 For testing with WMA technologies, the mixing temperature for the laboratory prepared samples shall be per the WMA technology manufacturer's recommendations, but shall not exceed the maximum anticipated mixing temperature during field production. In making laboratory mixing temperature recommendations, the WMA technology manufacturer should consider the mixing temperature based on the viscosity-temperature curve for the asphalt which has been modified with the WMA technology as well as the minimum mixing temperature required for adequate coating.

3.4.1.1.2 For mix design testing without the WMA technology, the temperature of the asphalt, aggregate, and mineral admixture at the time mixing begins shall be the mix design laboratory mixing temperature, which is normally based on the viscosity-temperature curve for the asphalt which has not been modified with the WMA additive.

3.4.2 Subsection 5(a) of ARIZ 802 is revised to read:

3.4.2.1 Place the samples in an oven maintained at 255 ± 5 °F.

3.4.2.2 A mold and bottom plunger for each sample shall be heated to the compaction temperature specified below:

3.4.2.2.1 For mixtures with WMA technology, the samples shall be at a compaction temperature of 255 ± 5 °F, unless an alternative compaction temperature is recommended by the WMA technology manufacturer and approved by the Engineer.

3.4.2.2.2 For mixtures without the WMA technology, the compaction temperature shall be 255 ± 5 °F.

3.5 For WMA water foaming processes, if laboratory water foaming equipment is not available, the specimens for Immersion Compression testing may be fabricated from plant produced mix. The specimens shall be tested as described above except the specimens shall be compacted without allowing the mixture to cool after the sample is obtained. Reheating, aging, or curing will not be allowed. This process must be explained, and the results reported, in the mix design.

3.6 When a WMA technology is used in the mixture, the following additional information shall be included in the mix design:

1) WMA technology information and/or WMA additive information.
2) Recommended temperature range for mixing during production.
3) Recommended temperature range for compaction during production.
4) WMA technology manufacturer's established target rate for water and additives, and the acceptable variation during production.
5) Actual laboratory mixing and compaction temperatures used during mix design testing.
6) Immersion Compression test results as specified in Section 3.4 above.

4. CONSTRUCTION AND HOT PLANT REQUIREMENTS

4.1 For asphaltic concrete with WMA technologies, the contractor shall use equipment and WMA technologies capable of producing an asphaltic concrete mixture that meets specification requirements and is workable at the minimum placement and compaction temperature desired, regardless of storage or haul distances.

4.2 The contractor must modify the hot plant as required by the WMA technology manufacturer to introduce the WMA technology. Plant modifications may include additional plant instrumentation, the installation of asphalt binder foaming systems and/or WMA additive delivery systems, adjusting the plant burner and/or the mixing drum flights in order to operate at lower production temperatures, and/or reducing the production rate of WMA.

4.3 ADOT specifications require that the moisture content of the asphaltic concrete immediately behind the paver does not exceed 0.5 percent. To ensure that this requirement is met, the contractor shall implement best management practices in the control of aggregate moisture prior to the introduction of aggregate into the drying or mixing drum, as well as during WMA production.

4.4 It may be beneficial to produce the asphaltic concrete mixture at conventional temperatures immediately before WMA production at the lower temperatures in order to bring the plant up to temperature and ensure proper baghouse operation.

4.5 The WMA mix shall be inspected at the hot plant and on the grade to ensure that aggregate is fully coated during WMA production. If complete aggregate coating is not achieved, modifications to current production shall be made to produce an asphaltic concrete mixture with fully coated aggregate.

5. ACCEPTANCE TESTING

5.1 When a WMA technology is used in the mixture, all specified acceptance testing requirements in the specifications shall apply to the asphaltic concrete mix. Acceptance testing for the WMA mix will be performed at the same frequency and with the same requirements in the specifications for asphaltic concrete.

5.2 When producing asphaltic concrete with WMA technologies, samples for mixture properties acceptance testing shall be allowed to cool and then be reheated prior to testing. Acceptance samples shall be prepared and split in accordance with Arizona Test Method 416. Unless the WMA technology remains active in the mix, the compaction temperature for preparing Marshall or Gyratory specimens in accordance with ARIZ 410 or AASHTO T 312, respectively, shall be based on the laboratory compaction temperature of the original binder. If the WMA technology remains active in the mix after the time needed to cool and reheat the sample, the mix designer shall specify alternative laboratory compaction temperatures for ARIZ 410 and AASHTO T 312. Additional heating or aging of samples beyond that required in Arizona Test Methods 416, 410, 417, and AASHTO T 312 shall not be allowed.

5.3 Additional moisture content testing shall be performed when WMA technologies are used in asphaltic concrete. There is additional concern of moisture in the mix during WMA production due to the lower hot plant temperatures, especially with highly absorptive aggregates. To ensure that the moisture content of the asphaltic concrete behind the paver does not exceed the specified maximum of 0.5 percent, separate moisture content samples shall be taken at a frequency determined by the Engineer.

5.4 If the WMA technology alters the asphalt binder rheological properties beyond such time needed to produce, place, compact, and allow the mixture to cool, sampling for acceptance testing of the binder shall occur after the WMA additive is added to the binder. In such case, the mixing of the binder and the WMA technology shall be performed at the asphalt terminal, and sampling will be accomplished after delivery of the binder to the hot plant.

Bill Hurguy, P.E.
Assistant State Engineer
Materials Group

ARIZONA DEPARTMENT OF TRANSPORTATION * MATERIALS GROUP

1221 NORTH 21ST AVENUE PHOENIX, ARIZONA 85009-3740 PHONE (602) 712- 7231

POLICY AND PROCEDURE DIRECTIVE

TO: ALL MANUAL HOLDERS	PPD NO. 24
SUBJECT: REQUIREMENTS FOR THE APPROVAL OF MECHANICALLY STABILIZED EARTH (MSE) WALL SYSTEMS	EFFECTIVE DATE: August 30, 2013

1. GENERAL

1.1 This Policy and Procedure Directive outlines the process for approval of a Mechanically Stabilized Earth (MSE) wall system. These requirements are used in conjunction with the Arizona Department of Transportation (ADOT or Department) Specifications.

1.2 "Mechanically Stabilized Earth (MSE) Wall" is the term used for a retaining wall system consisting of multiple structural components with horizontal anchor elements connected to the back face of the wall and embedded in backfill material behind the wall such that the mass and friction of the backfill material on the anchor elements prevents the wall from failing.

1.3 The complexity of the design and the propriety of specific wall components generally preclude the opportunity to generate a unique wall system design for each specific project. The Department's highway development process is significantly enhanced through the selection of a preapproved MSE wall system that may be readily adapted to a specific project.

2. MSE WALL SYSTEM APPROVAL

2.1 In order to be placed on the Department's Approved Products List (APL) the MSE wall system shall be reviewed and evaluated by an Engineer, hereafter called the Reviewing Engineer, whose qualifications are acceptable to the Materials Group. The Reviewing Engineer shall produce an evaluation report acceptable to the Materials Group.

2.2 The Materials Group will make the final decision on the acceptability of the Reviewing Engineer and the acceptability of the evaluation report. Materials Group will present its recommendation to the Materials Product Evaluation Committee for addition of the MSE Wall System to the APL.

3. MSE WALL SYSTEMS APPROVAL PROCESS

3.1 Any MSE wall manufacturer, supplier, vendor, or contractor, hereinafter referred to as the Wall Company, may request that the Department add its propriety wall system to the APL as follows:

3.1.1 To be placed on the APL, the Wall Company must complete the application available on the internet from the ADOT Research Center through its Product Evaluation Program.

3.1.2 The ADOT Research Center will notify ADOT Materials Group, Geotechnical Design Section, of the receipt of the application.

3.1.2 The Materials Group will provide the Wall Company with an Approval Package that includes the criteria under which the wall system shall be evaluated.

3.1.3 The Wall Company shall complete the approval application and propose to the Materials Group that the evaluation be conducted by a Reviewing Engineer meeting the qualifications as listed in Section 4 below.

3.1.4 The Materials Group will advise the Wall Company as to the acceptability of the proposed Reviewing Engineer.

3.1.5 The Wall Company shall contract with the Reviewing Engineer to evaluate the wall system and produce a report in the format outlined in the Approval Package.

3.1.6 Upon completion of the evaluation, the Wall Company shall submit the Reviewing Engineer's evaluation report, without modification, to the Materials Group.

3.1.7 After receipt of the completed report, the Materials Group will review the report and either:

(a) accept the report and recommend placement of the wall system on the APL by the Materials Product Evaluation Committee,

(b) request additional information from the Wall Company,

(c) accept the report with restrictions, and recommend placement of the wall system on the APL with the restrictions, or

(d) reject the report.

3.2 With respect to the MSE wall review and evaluation, the Arizona Department of Transportation will have no contractual relationship with the Reviewing Engineer. Coordination of, and payment for, the evaluation by the Reviewing Engineer is the responsibility of the Wall Company. All submittals, reviews, analysis, evaluations, and reports performed by the Reviewing Engineer shall be at no cost to the Department.

4. REVIEWING ENGINEER QUALIFICATIONS

4.1 The Reviewing Engineer performing the MSE wall evaluation shall be a Professional Engineer Registered by the Arizona State Board of Technical Registration. The report submitted to Materials Group shall be sealed by the Reviewing Engineer.

4.1.1 The Wall Company shall submit the Reviewing Engineer's resume and satisfactory evidence that the Reviewing Engineer has, at a minimum, the following experience:

(a) 10 years experience with the design and construction of MSE walls, and

(b) authored at least two American Association of State Highway and Transportation Officials (AASHTO), American Society of Civil Engineers (ASCE), Federal highway Administration (FHWA), or National Highway Institute (NHI) publications relating to the design and construction of MSE walls, and

(c) authored at least two AASHTO, ASCE, FHWA, or NHI publications relating to AASHTO Load Resistance Factor Design (LRFD) design of MSE walls.

4.2 Alternatively, the Wall Company may propose that the evaluation be conducted by the Highway Innovative Technology Center (HITEC) of ASCE. The HITEC Technical Evaluation Report shall include, or be appended with, two additional test cases as shown in the Approval Package. The HITEC Technical Evaluation Report and any appendix shall be sealed by a Professional Engineer registered by the Arizona State Board of Technical Registration.

4.3 Other than performing the wall evaluation, the Reviewing Engineer shall have no ownership relationship with the Wall Company, and has not been an employer or employee of the Wall Company at any time during the previous five years. Any conflict of interest between the Reviewing Engineer and the Wall Company may result in disapproval of the Reviewing Engineer, rejection of the evaluation report, or the removal of the wall system from the list.

5. MSE WALL LIST RENEWAL

5.1 Any wall system on the APL will expire:

(a) five years from the date of placement on the list,

(b) upon any changes in the Wall Company's materials or design specification, or

(c) if there are revisions in the technology such that updates to the design or approval process are deemed by ADOT to be necessary.

5.2 Provided that there are no changes as described in Section 5.1 that would require a new evaluation, as determined by ADOT, the renewal of the wall system on the APL may be expedited by a written request from the Wall Company certifying that no changes have occurred.

6. MSE WALL SYSTEM PERFORMANCE

6.1 ADOT reserves the right to remove an MSE wall system from the APL at any time and at its sole discretion. The reasons for the removal may include, but are not limited to:

(a) wall failure, as determined by ADOT, on any public or private project;

(b) non-response by the Wall Company, the Reviewing Engineer, or the contractor to an ADOT request;

(c) substandard performance; lack of proper quality control; or,

(d) improper response to correct construction defects.

6.2 Placement of a wall system on the Approved Products List does not constitute a commitment or agreement by ADOT to use the system on any highway construction project.

Bill Hurguy, P.E.
Assistant State Engineer
Materials Group

Attachment

ARIZONA DEPARTMENT OF TRANSPORTATION * MATERIALS GROUP

1221 NORTH 21ST AVENUE PHOENIX, ARIZONA 85009-3740 PHONE (602) 712 – 7231

SAMPLE
APPROVAL PACKAGE

REQUIREMENTS FOR THE APPROVAL OF MECHANICALLY STABILIZED EARTH (MSE) WALL SYSTEMS

Item	Page	Content
A	2 - 4	Submittal Requirements for Approval of MSE Wall Systems
B	5 - 6	MSE Wall System Approval Application and Proposed Reviewing Engineer.
C	7 - 15	Reviewing Engineer's Report Format
D	16 - 19	Test Case Problems to be Included in the Reviewing Engineer's Report

ITEM A

Submittal Requirements for Approval of MSE Wall Systems

1. GENERAL

1.1 This Approval Package outlines the process for approval of a Mechanically Stabilized Earth (MSE) wall system and placement of the wall system on the ADOT Approved Products List (APL).

1.2 MSE wall systems must meet the requirements of the current ADOT specifications or Special Provisions.

2. MSE WALL SYSTEM APPROVAL

2.1 In order to be placed on the APL, the MSE wall system shall be reviewed and evaluated by an Engineer, hereafter called the Reviewing Engineer, whose qualifications are acceptable to the Materials Group. The Reviewing Engineer shall produce an evaluation report acceptable to the Materials Group.

2.2 The Materials Group will make the final decision on the acceptability of the Reviewing Engineer and the acceptability of the evaluation report. Materials Group will present its recommendation to the Materials Product Evaluation Committee for addition of the MSE Wall System to the APL.

3. MSE WALL SYSTEMS APPROVAL PROCESS

3.1 Any MSE wall manufacturer, supplier, vendor, or contractor, hereinafter referred to as the Wall Company, may request that the Department add its propriety wall system to the APL as follows:

3.1.1 To be placed on the APL, the Wall Company must complete the application available on the internet from the ADOT Research Center through its Product Evaluation Program.

3.1.2 The ADOT Research Center will notify Materials Group, Geotechnical Design Section, of the receipt of the application.

3.1.2 The Materials Group will provide the Wall Company with a copy of this Approval Package which includes the criteria under which the wall system shall be evaluated.

3.1.3 The Wall Company shall complete the approval application and propose to the Materials Group that the evaluation be conducted by a Reviewing Engineer meeting the qualifications as listed in Section 4 below.

3.1.4 The Materials Group will advise the Wall Company as to the acceptability of the proposed Reviewing Engineer.

3.1.5 The Reviewing Engineer shall produce the evaluation report in the format outlined in Item C of this document.

3.1.6 Upon completion of the evaluation, the Wall Company shall submit the Reviewing Engineer's evaluation report, without modification, to the Materials Group.

3.1.7 After receipt of the completed report, the Materials Group will review the report and either:

(a) accept the report and recommend placement of the wall system on the APL by the Materials Product Evaluation Committee,

(b) request additional information from the Wall Company,

(c) accept the report with restrictions, and recommend placement of the wall system on the APL with the restrictions, or

(d) reject the report.

3.2 With respect to the MSE wall review and evaluation, the Arizona Department of Transportation will have no contractual relationship with the Reviewing Engineer. Coordination of, and payment for, the evaluation by the Reviewing Engineer is the responsibility of the Wall Company. All submittals, reviews, analysis, evaluations, and reports performed by the Reviewing Engineer shall be at no cost to the Department.

4. REVIEWING ENGINEER QUALIFICATIONS

4.1 The Reviewing Engineer performing the MSE wall evaluation shall be a Professional Engineer Registered by the Arizona State Board of Technical Registration. The report submitted to Materials Group shall be sealed by the Reviewing Engineer.

4.1.1 The Wall Company shall submit the Reviewing Engineer's resume and satisfactory evidence that the Reviewing Engineer has, at a minimum, the following experience:

(a) 10 years experience with the design and construction of MSE walls, and

(b) authored at least two American Association of State Highway and Transportation Officials (AASHTO), American Society of Civil Engineers ASCE, Federal Highway Administration (FHWA), or National Highway Institute (NHI) publications relating to the design and construction of MSE walls, and

(c) authored at least two AASHTO, ASCE, FHWA, or NHI publications relating to AASHTO Load Resistance Factor Design (LRFD) design of MSE walls.

4.2 Alternatively, the Wall Company may propose that the evaluation be conducted by the Highway Innovative Technology Center (HITEC) of ASCE. The HITEC Technical Evaluation Report shall include, or be appended with, two additional test cases shown as Problems five and six below. The HITEC Technical Evaluation Report and any appendix shall be sealed by a Professional Engineer registered by the Arizona State Board of Technical Registration.

5. MSE WALL LIST RENEWAL

5.1 Any wall system on the APL will expire:

(a) five years from the date of placement on the list,

(b) upon any changes in the Wall Company's materials or design specification, or

(c) if there are revisions in the technology such that updates to the design or approval process are deemed by ADOT to be necessary.

5.2 Provided that there are no changes as described in Section 5.1 that would require a new evaluation, as determined by ADOT, the renewal of the wall system on the APL may be expedited by a written request from the Wall Company certifying that no changes have occurred.

6. MSE WALL SYSTEM PERFORMANCE

6.1 ADOT reserves the right to remove an MSE wall system from the APL at any time and at its sole discretion. The reasons for the removal may include, but are not limited to:

(a) wall failure, as determined by ADOT, on any public or private project;

(b) non-response by the Wall Company, the Reviewing Engineer, or the contractor to an ADOT request;

(c) substandard performance; lack of proper quality control; or,

(d) improper response to correct construction defects.

6.2 Placement of a wall system on the Approved Products List does not constitute a commitment or agreement by ADOT to use the system on any highway construction project.

ITEM B

MSE Wall System Approval Application and Proposed Reviewing Engineer Form

Company / Firm Name	
Product Name	
Name and contact information of Authorized Representative who will serve as the contact person for the Wall Company through this approval process	Name: Address: Phone #: Fax #: E-Mail:
Signature and Title of the Authorized Wall Company Representative	Signature: _____ Print Name: _____ Title: _____ Date: _____

A. Ownership of Technology or Product (circle your answer)

Yes No Are you the owner of the technology or product? If not, please describe the licensing or other contractual arrangement, which gives you the legal right to the technology or product being submitted to ADOT for approval.

B. Patents (circle your answers)

1. Yes No Do you agree to provide technical assistance (on-site or via telephone with needed supporting documentation and information) to ADOT throughout the approval process at no cost to ADOT?

2. Yes No Do you grant permission to ADOT to reproduce, in full or in part, any information supplied by you or the Reviewing Engineer in association with the Application, unless specifically excluded and clearly marked as not being authorized for reproduction? This permission also will apply to material with copyrights held by you.

3. Yes No Does the product involve proprietary technology?

4. Yes No Is the product patented, copyrighted, or otherwise protected?

5. If proprietary or patented technology is involved, please provide a summary description of the proprietary / protected features [attach additional sheet(s) if necessary]:

C. Propose a Reviewing Engineer

When proposing a Reviewing Engineer please include the following:

1. The name of the consultant firm that will evaluate the MSE wall, complete the test case problems, and produce the Report.

2. The name and registration number of the Arizona Registered Engineer employed by the consultant firm who will seal the Report.

3. The resume and list of qualifications of the Reviewing Engineer, showing specifically that the minimum qualifications as shown in Section 4 in Item A of this Approval Package have been met.

D. Conflict of interest

By signing the Approval Application the Wall Company certifies that there is no conflict of interest between itself and the Reviewing Engineer, and that the Reviewing Engineer has no ownership relationship with the Wall Company, and has not been an employer or employee of the Wall Company at any time during the previous five years.

Any conflict of interest between the Reviewing Engineer and the Wall Company may result in disapproval of the Reviewing Engineer, rejection of the evaluation report, or the removal of the wall system from the list.

ITEM C

Reviewing Engineer's Report Format

INSTRUCTIONS

A. Evaluation by a Reviewing Engineer

The Reviewing Engineer's Report shall include the required information in the following format.

Please respond to all items that apply to the system and its components.

Responses should be organized in the order shown and referenced to the given numbering system. Duplication of information is not necessary. The report should reference applicable sections where information has been provided in another section.

B. Evaluation by the Highway Innovative Technology Center (HITEC) of the American Society of Civil Engineers

The standard HITEC Evaluation will be accepted provided that the report is supplemented by the two additional test cases shown as PROBLEM 5 and PROBLEM 6 in Item D of this document, and the HITEC Report is sealed by the Engineer who produced the evaluation report and who is registered as a Professional Engineer with the Arizona State Board of Technical Registration.

TABLE OF CONTENTS

1.0 System
- 1.1 Description of System and Components
- 1.2 History
- 1.3 Arizona Applications
- 1.4 System Warranties
- 1.5 Designated Responsible Parties
- 1.6 Insurance Coverage for Responsible Party

2.0 Design
- 2.1 Summary of Design Parameters
- 2.2 Design Responsibility
- 2.3 Summary of Design Procedures
- 2.4 Summary of Example Calculations
- 2.5 Limitations

3.0 Materials
- 3.1 Facing Unit – wet cast, steel reinforced panels
- 3.2 Modular Block – dry-cast, unreinforced masonry units
- 3.3 Metallic Soil Reinforcement
- 3.4 Geosynthetic Soil Reinforcement
- 3.5 Facing Connection Components
- 3.6 Reinforced Wall Fill
- 3.7 Leveling Pad
- 3.8 Drainage Elements
- 3.9 Coping
- 3.10 Traffic Railing / Barrier
- 3.11 Precast Connections to Appurtenances
- 3.12 Other Materials
- 3.13 Quality Control / Quality Assurance Systems

4.0 Details
- 4.1 Standard Details
- 4.2 Example Details

5.0 Construction
- 5.1 Fabrication of Facing Units
- 5.2 Field Construction Manual
- 5.3 Construction Specifications
- 5.4 Contractor or Subcontractor Prequalification Requirements
- 5.5 Quality Control / Quality Assurance of Construction
- 5.6 Construction / In-Service Structure Problems
- 5.7 Maintenance
- 5.8 Quality Control History

1.0 System

1.1 Description of System and Components
   a. Summarize what the system consists of, and what is not included.
   b. List each component of the system.
   c. List material requirements for each component.

1.2 History
   a. Summarize the history of development and application of the system.
   b. Summarize refinements made to the system, since inception.
   c. Summarize performance (with photos, where available) of constructed structures, including:
      i. oldest
      ii. highest
      iii. projects experiencing maximum measured settlement (total and differential)
      iv. measurements of lateral movement / tilt
      v. demonstrated aesthetics
      vi. project photos
      vii. maintenance history
   d. Summarize any incidents of where the product or any component of the project for which an approval was revoked by a government agency during the past five years. List these products, if any, and describe the relationship between the rejected or revoked product and the product being evaluated in this report. Where applicable, include a description of any predecessor product.

1.3 Arizona Applications
   a. Summarize the history of application of the system in Arizona.
   b. Summarize the history of application of the system on ADOT projects.
   c. Summarize design issues specific to Arizona applications.
   d. Summarize construction issues specific to Arizona applications.
   e. Provide a list of non-ADOT users, including a contact person for each user with their telephone number and a summary of the project application.

1.4 System Warranties – provide a copy of any system warranties

1.5 Designated Responsible Parties – summarize responsibilities for:
   a. system performance
   b. material performance
   c. project-specific design

1.6 Insurance Coverage for Responsible Party – list insurance coverage types (e.g., professional liability, product liability, performance), limits, and basis (i.e., per occurrence, claims made) provided by each responsible party.

2.0 Design

2.1 Summary of Design Parameters – provide a summary of the following, and note applicable standard and / or test method used to quantify value:

a. Ultimate strength of soil reinforcement element(s)
b. Long-term allowable strength of soil reinforcement element(s)
c. Direct shear interaction coefficient
d. Normalized pullout resistance factors, F* and α
e. Galvanization thickness

2.2 Design Responsibility

a. State designated responsible party for project-specific design.
b. List professional liability insurance coverage limits and basis (i.e., per occurrence, claims made) provided by the design responsible party.
c. Detail the system designer's Quality Control / Quality Assurance programs for project designs.
d. List those items of a project design that you understand, or assume, are the responsibility of ADOT.

2.3 Summary of Design Procedures

a. Summarize all deviations from the most current American Association of State Highway and Transportation Officials (AASHTO) LRFD Bridge Design Specifications, along with theoretical or empirical information which support such deviations.
b. Summarize when and how compound / global stability are assessed.
c. Summarize seismic design considerations.
d. Detail design modification for tiered structures.
e. Detail design modification for acute corners.
f. Detail design to overcome obstructions (e.g., drainage structures, deep foundations, etc.) in reinforced zones.

2.4 Summary of Example Calculations

a. Provide detailed calculations for the long-term allowable tensile strength of the soil reinforcement to facing unit connector(s). Note any deviation from the most current AASHTO LRFD Bridge Design Specifications.
b. Provide detailed calculations for reinforcements in facing units, as applicable.

2.5 Limitations – list all design limitations, including seismic loading; environmental restraints; wall height; external loading; differential settlement; and others

3.0 Materials – Provide material specifications describing the material type, quality, certifications, lab and field testing, and acceptance and rejection criteria, along with support information (and where noted, a sample of the material) for each of the following material items. Include representative test results (lab and field) clearly referencing the date, source, and method of test, and where required, the method and detailed explanation of interpretation and extrapolation. Note the source of the supplied information, include a listing of facilities normally used for testing (e.g.,

in-house and independent). Clearly identify the materials listed below that do not apply to the product being submitted.

3.1 Facing Unit – wet-cast, steel reinforced panels

a. standard dimensions and tolerances
b. steel reinforcement details
c. joint sizes and details
d. concrete strength (minimum)
e. wet cast concrete % air (range)
f. freeze thaw durability
g. bearing pads (joints)
h. spacers (pins, etc.)
i. joint filter requirements: geotextile or graded granular
j. aesthetic choices (texture, relief, color, graffiti treatment)
k. other facing materials

3.2 Modular Block – dry-cast, unreinforced masonry units

a. standard dimensions and tolerances
b. thickness at front face
c. joint sizes and details
d. concrete strength (minimum)
e. dry cast concrete density (minimum or range)
f. moisture absorption (percent and by weight)
g. salt scaling
h. freeze thaw durability
i. facing unit to facing unit shear resistance
j. bearing pads
k. spacers, pins, etc.
l. joint filler requirements: geotextile or graded granular
m. maximum recommended vertical joint opening
n. aesthetic choices (textures, relief, color, graffiti treatment)
o. other facing materials

3.3 Metallic Soil Reinforcement

a. manufacturing sizes, tolerances and lengths
b. ultimate and yield strength of steel
c. minimum galvanization thickness for 75 year design life
d. sacrificial steel thicknesses for 75 and 100 year design life
e. pullout interaction coefficients for range of backfill

3.4 Geosynthetic Soil Reinforcement

a. polymer resin and grade
    i. High Density Poly Ethylene (HDPE): resin type, class, grade, and category
    ii. Polypropylene (PP): resin type, class, grade, and category

iii. Polyester (PET): minimum intrinsic viscosity correlated to number average molecular weight and maximum carboxyl end groups
iv. mass per unit area
v. post-consumer recycled material, if any

b. ultimate strength minimum average roll value and coefficient of variation for ultimate strength
c. QC strength (e.g., single rib, grab or strip) minimum average roll value
d. creep reduction factors for 75 and 100 year design life, including effect of temperature (20 °C to 40 °C)
e. durability reduction factor (chemical, hydrolysis, oxidative) for 75 and 100 year design life
f. additional durability reduction factor for high biologically active environments
g. installation damage reduction factor for range of backfill (e.g., sand, sandy gravel, gravel, coarse gravel) for allowable gradation criteria
h. junction strength (geogrids) for quality control
i. seam strength
j. pullout interaction coefficients for range of backfills
k. embedment scale factor
l. coatings (type and amount)
m. UV inhibitors, coatings, etc.
n. UV resistance

3.5 Facing Connection Components
a. mode (e.g., structural, frictional, or combined)
b. connection strength as a % of reinforcement strength at various confining pressures for each reinforcement product and connection type submitted
c. composition of devices, dimensions, tolerances
d. full scale connection test method / results

3.6 Reinforced Wall Fill
a. soil classification
b. gradation range
c. unit weight (design and representative measured)
d. friction angle (design and representative measured)

3.7 Leveling Pad
a. cast-in-place
b. precast
c. granular

3.8 Drainage Elements
a. weep holes
b. surface drainage components
c. subsurface drainage components

3.9 Coping

a. precast
b. precast attachment method / details
c. cast-in-place
d. precast and cast-in-place combination

3.10 Traffic Railing / Barrier

a. precast
b. cast-in-place
c. precast and cast-in-place combination

3.11 Precast Connections to Appurtenances

3.12 Other Materials

a. corner elements
b. b. slip-joint elements

3.13 Quality Control / Quality Assurance Systems

a. material suppliers
    i. metallic reinforcement
    ii. polymeric reinforcement
    iii. concrete products
    iv. wall fill
b. fabricator(s)
c. test facilities (internal and external)

4.0 Details

4.1 Standard Details – provide detailed drawings of the following standard details (in hard copy and also in electronic copy in Microstation J format):

a. leveling pad
b. face unit steel reinforcement and connection inserts
c. erection details of face units including temporary bracing, batter, joint spacing, etc
d. connection
e. top of wall coping
f. top of wall traffic barrier
g. bottom of wall traffic barrier
h. top of wall membrane protection for areas where deicing salts are used
i. construction of cast-in-place traffic barriers
j. joint drainage details
k. weep holes
l. subsurface drainage
m. subsurface drain outlets
n. overhead light standard incorporated into the wall facing
o. slip joint detail
p. end of wall

q. connection to appurtenances (e.g., box inlets and large obstructions)
r. fill placement procedures at reinforcement elevation
s. architectural face finish options

4.2 Example Details – provide detailed drawings illustrating typical examples of the following details:

a. stepping of leveling pad with existing and final grades
b. stepping of top of wall with final grade
c. placement of reinforcement around steel piles
d. placement of reinforcement around concrete shafts
e. placement of reinforcement around drop inlet structures
f. placement of reinforcement around pipe penetrations

5.0 Construction – Provide the following information related to construction of the system:

5.1 Fabrication of Facing Units

a. curing times
b. form removal
c. concrete surface finish requirements

5.2 Field Construction Manual – provide a documented field construction manual describing in detail, with illustrations as necessary, the step-by-step construction sequence, including requirements for:

a. foundation preparation
b. special tools required
c. leveling pad
d. facing erection
e. facing batter for alignment
f. steps to maintain horizontal and vertical alignment
g. retained and backfill placement / compaction
h. erosion mitigation
i. all equipment requirements

5.3 Construction Specifications – include sample construction specifications that address:

a. materials requirements
b. field sampling, testing, and acceptance / rejection requirements
c. installation requirements
d. maintenance requirements
e. aesthetics compliance, including texture, color, graffiti treatment, and durability of aesthetic features

5.4 Contractor or Subcontractor Prequalification Requirements – list any contractor or subcontractor prequalifications

5.5 Quality Control / Quality Assurance of Construction – detail the quality control and quality assurance measurements required during construction to assure consistency in meeting performance requirements, and responsible parties for each

5.6 Construction / In-Service Structure Problems – provide case histories of structures where problems have been encountered, including an explanation of the problems and methods of repair

5.7 Maintenance – provide a listing of maintenance requirements to maintain performance and repair damage. If available, provide a maintenance manual

5.8 Quality Control History – provide the history for the system and material quality along with improvements that have been made based on the experience with the system

ITEM D

Test Case Problems to be Included in the Reviewing Engineer's Report

All references made to AASHTO (2012) herein shall mean "AASHTO LRFD Bridge Design Specifications", 6th Edition, including latest Interims.

PROBLEM 1:

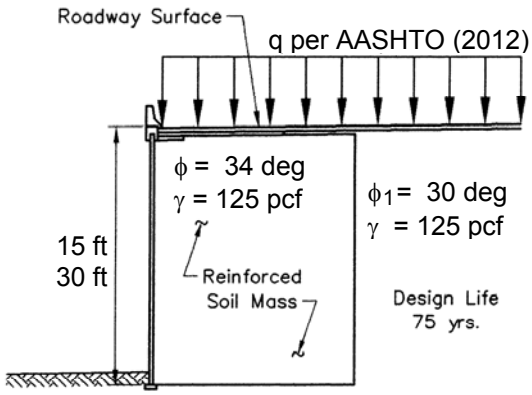

PROBLEM 2:

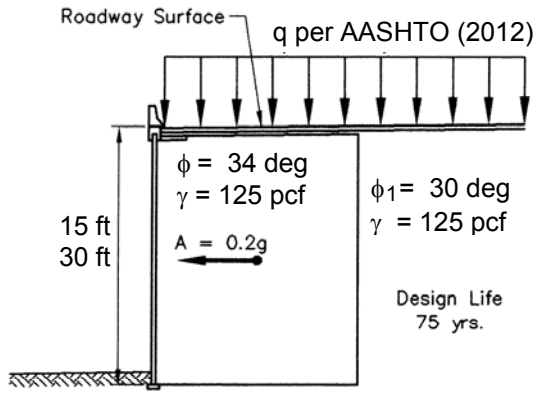

Note: For Problems 1 and 2, incorporate the presence of barriers in the design in terms of impact loading. Use ADOT 42-inch barrier detail as shown in ADOT Standard Drawing No. SD-1.02. Use Test Level-5 (TL-5) loading as per Table A13.2-1 in AASHTO (2012).

PROBLEM 3:

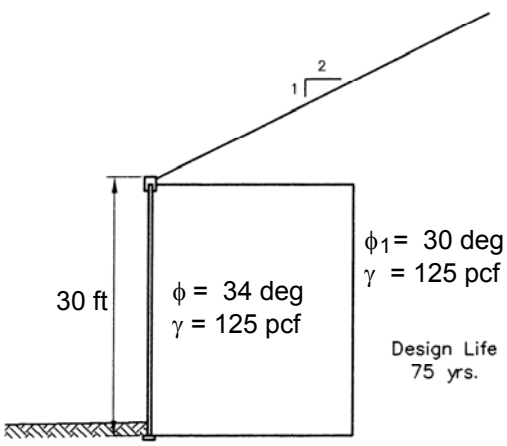

PROBLEM 4:

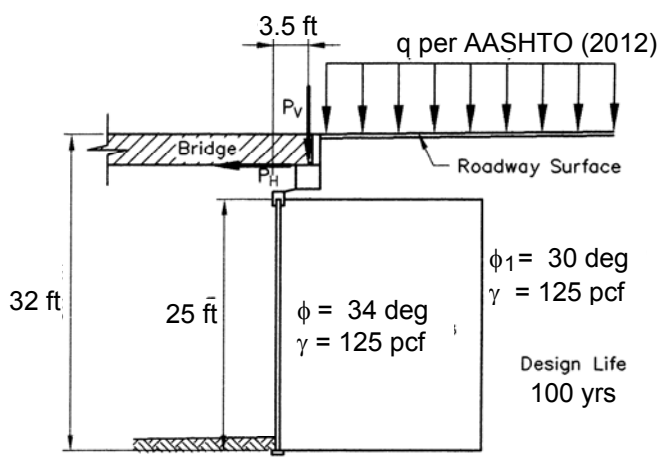

P_V = 10.6 k/ft (Dead); 5.7 k/ft (Live)
P_H = 1 k/ft

Assume following conditions:

1. Setback of edge of the footing from the back of the facing units is 6-inches
2. Footing width = 10.75 ft
3. Footing to be resting on top of MSE mass, i.e., 25-ft above the top of leveling pad.
4. Height of backwall (incl footing thickness= 7-ft
5. No approach slab, i.e., consider full live load

PROBLEM 5:

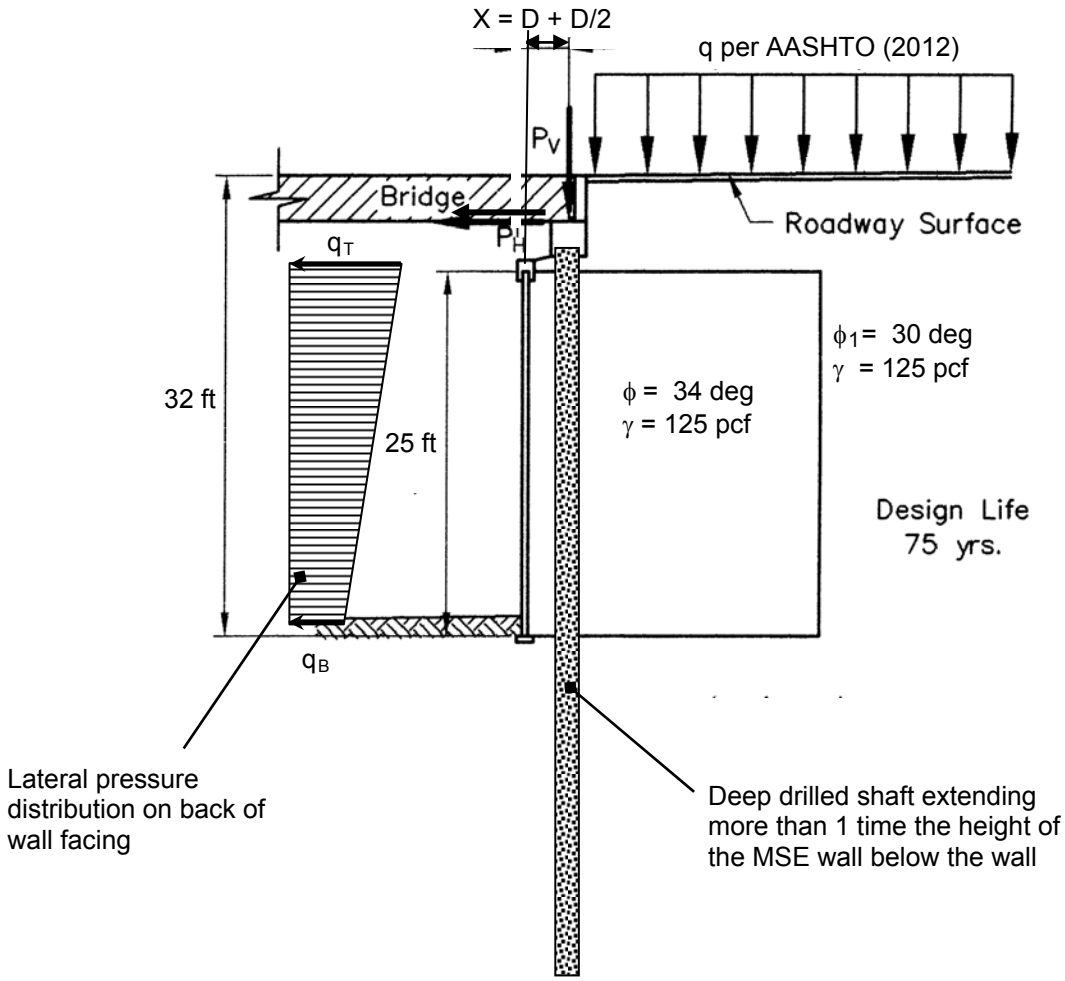

q_T = 200 psf ; q_B = 75 psf

Note: X is measured from the back-face of the facing unit to the center of the drilled shaft.

PROBLEM 6:

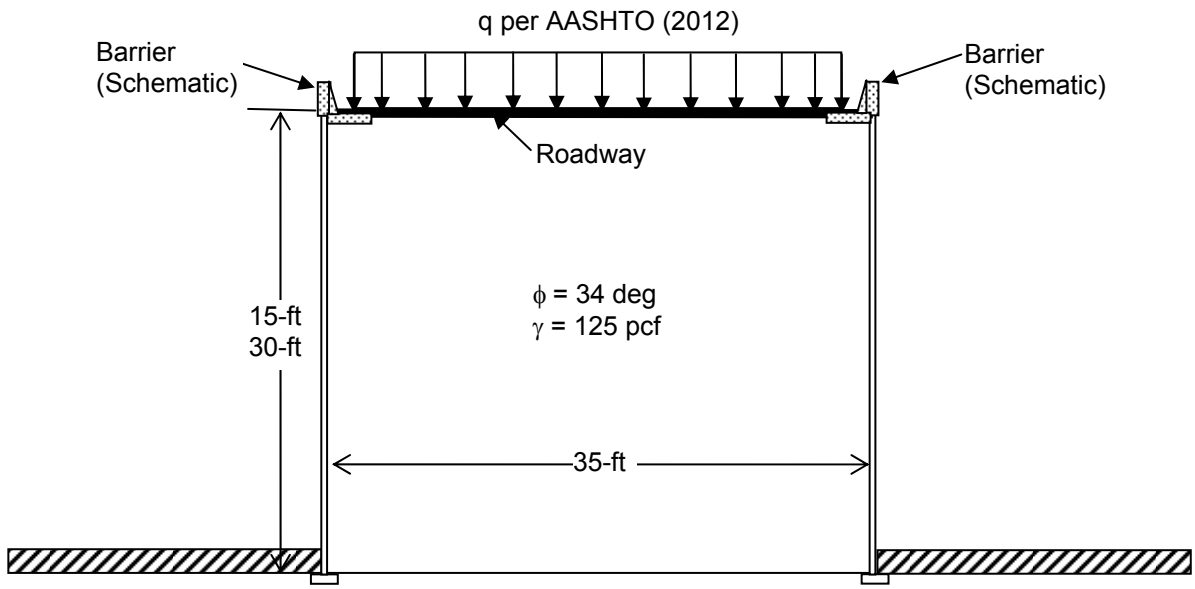

Note: Incorporate the presence of barriers in the design in terms of impact loading. Use ADOT 42-inch barrier detail as shown in ADOT Standard Drawing No. SD-1.02. Use Test Level-5 (TL-5) loading as per Table A13.2-1 in AASHTO (2012).