CHANGE LETTER
MATERIALS TESTING MANUAL

SUBJECT: Title Page; Table of Contents; Series 100 Cover Sheet; Series 200 Cover Sheet; Series 400 Cover Sheet; Series 500 Cover Sheet; Arizona Test Methods 103b, 201d, 211e, 225b, 233d, 245a, 247b, 406d, 410f, 416e, 417e, 512b and Appendix A1.

CHANGE LETTER NO. 34

EFFECTIVE DATE: December 4, 2015

SUMMARY:

NOTE: Unless otherwise specified, changes issued under this Change Letter are effective for projects with a bid opening date on or after December 4, 2015. Retain items removed from the Materials Testing Manual under this change letter for use as necessary on projects with a bid opening date prior to December 4, 2015.

1. TITLE PAGE The Title Page has been revised to show the latest Change Letter number and revision date. Please replace the existing Title Page with the attached.

2. TABLE OF CONTENTS The Table of Contents has been revised to reflect the changes made in this Change Letter. Please replace the existing Table of Contents with the attached.

3. The following items have been revised to reflect the changes made in this Change Letter. Please replace the existing items with the attached.

   Series 100 Cover Sheet – “SAMPLING”

   Series 200 Cover Sheet – “SOILS AND AGGREGATES”

   Series 400 Cover Sheet – “BITUMINOUS MIXTURES”

   Series 500 Cover Sheet – “BITUMINOUS MATERIALS”

4. The following test methods have been revised. Please replace the existing test methods with the attached.

Arizona Test Method 103b – "Sampling Bituminous Materials"

Arizona Test Method 201d – "Sieving of Coarse and Fine Graded Soils and Aggregates"

Arizona Test Method 211e – "Specific Gravity and Absorption of Fine Aggregate"

Arizona Test Method 225b – "Maximum Density and Optimum Moisture of Soils by Proctor Method A"

Arizona Test Method 233d – "Flakiness Index of Coarse Aggregate"

Arizona Test Method 245a – "Maximum Density and Optimum Moisture of Soils by Proctor Alternate Method D"

Arizona Test Method 247b – "Particle Shape and Texture of Fine Aggregate Using Uncompacted Void Content"

Arizona Test Method 406d – "Moisture Content of Bituminous Mixtures"

Arizona Test Method 410f – "Compaction and Testing of Bituminous Mixtures Utilizing Four Inch Marshall Apparatus"

Arizona Test Method 416e – "Preparing and Splitting Field Samples of Bituminous Mixtures for Testing"

Arizona Test Method 417e – "Maximum Theoretical Specific Gravity and Density of Field Produced Bituminous Mixtures (Rice Test) "

Arizona Test Method 512b – "Residue by Evaporation"

5. The following Appendix item has been revised. Please replace the existing Appendix item with the attached.

   APPENDIX A1 – "Rounding Procedure"

Julie E. Kliewer, PhD, PE
Assistant State Engineer
Construction & Materials Group

Attachments (19)

MATERIALS

TESTING MANUAL

SAMPLING AND TESTING PROCEDURES

PREPARED BY:
ARIZONA DEPARTMENT OF TRANSPORTATION
INTERMODAL TRANSPORTATION DIVISION
CONSTRUCTION & MATERIALS GROUP

REVISED TO CHANGE LETTER NO. 34
(December 4, 2015)

ADOT Intermodal Transportation

December 4, 2015
(6 Pages)

MATERIALS TESTING MANUAL

TABLE OF CONTENTS

Introduction (June 17, 2008)
Glossary of Terms (July 15, 2005)

SERIES 100 SAMPLING**

ARIZ 103b	Sampling Bituminous Materials
ARIZ 104e	Sampling Bituminous Mixtures
ARIZ 105f	Sampling Soils and Aggregates
ARIZ 108	Sampling Hydrated Lime and Lime Products
ARIZ 109	Sampling Metallic Materials
ARIZ 110	Sampling Miscellaneous Materials

** The above Arizona Test Methods, and also commonly used AASHTO procedures in this category, are shown on Series 100 Cover Sheet (December 4, 2015).

SERIES 200 SOILS AND AGGREGATES**

ARIZ 201d	Sieving of Coarse and Fine Graded Soils and Aggregates
ARIZ 205c	Composite Grading
ARIZ 210b	Specific Gravity and Absorption of Coarse Aggregate
ARIZ 211e	Specific Gravity and Absorption of Fine Aggregate
ARIZ 212e	Percentage of Fractured Coarse Aggregate Particles
ARIZ 220	Determination of Cement Content Required for Cement Treated Mixtures
ARIZ 221	Moisture-Density Relations of Cement Treated Mixtures
ARIZ 222b	Rock Correction Procedure for Maximum Density Determination of Cement Treated Mixtures
ARIZ 223	Field Density of Cement Treated Mixtures by Sand Cone Method or by Rubber Balloon Method
ARIZ 225b	Maximum Dry Density and Optimum Moisture of Soils by Proctor Method A
ARIZ 226	Maximum Density and Optimum Moisture of Soils - Methods C and D
ARIZ 227c	Rock Correction Procedure for Maximum Dry Density and Optimum Moisture Content Determination

ARIZ 229a Calibration of Standard Sand and Sand Cone
ARIZ 230a Field Density by the Sand Cone Method
ARIZ 232b Moisture-Density Relationship Using Typical Moisture-Density Curves (One Point Proctor) Method A
ARIZ 233d Flakiness Index of Coarse Aggregate
ARIZ 235 Density and Moisture Content of Soil and Soil-Aggregate Mixtures by the Nuclear Method
ARIZ 236c Determining pH and Minimum Resistivity of Soils and Aggregates
ARIZ 237b Determining pH and Soluble Salts of Soils
ARIZ 238a Percent Carbonates in Aggregate
ARIZ 240a Sieve Analysis and Separation of Salvaged AC Pavement Particles for Recycled Asphaltic Concrete
ARIZ 241a Compressive Strength of Molded Cement Treated Base or Soil-Cement Specimens
ARIZ 242a Sand Equivalent Test for Mineral Aggregate for Asphaltic Concrete Friction Course
ARIZ 244 Artificial Grading of Mineral Aggregate
ARIZ 245a Maximum Dry Density and Optimum Moisture of Soils by Proctor Alternate Method D
ARIZ 246b Moisture-Density Relationship using Typical Moisture-Density Curves (One Point Proctor) Alternate Method D
ARIZ 247b Particle Shape and Texture of Fine Aggregate Using Uncompacted Void Content
ARIZ 248 Alternate Procedures for Sieving of Coarse and Fine Graded Soils and Aggregates
ARIZ 249 Remolded Ring Samples for Direct Shear, Swell, and Consolidation
ARIZ 251a Combined Coarse and Fine Aggregate Specific Gravity and Absorption

** The above Arizona Test Methods, and also commonly used AASHTO procedures in this category, are shown on Series 200 Cover Sheet (December 4, 2015).

SERIES 300 CONCRETE**

ARIZ 308a Method of Adjusting Concrete Mixes for Variations in Moisture Content
ARIZ 309a Testing Impervious Materials and Compounds for Curing Concrete
ARIZ 310a Measuring Texture Depth of Portland Cement Concrete with Metal Tine Finish
ARIZ 311a Method of Test for Flow of Grout Mixtures (Flow Cone Method)

ARIZ 314b Compressive Strength of Cylindrical Concrete Specimens
ARIZ 315 Precast Mortar Blocks Test
ARIZ 317a Obtaining and Testing Drilled Cores and Sawed Beams of Concrete
ARIZ 318 Estimating the Development of Concrete Strength by the Maturity Method

** The above Arizona Test Methods, and also commonly used AASHTO and ASTM procedures in this category are show on Series 300 Cover Sheet (March 31, 2010).

SERIES 400 BITUMINOUS MIXTURES**

ARIZ 406d Moisture Content of Bituminous Mixtures
ARIZ 410f Compaction and Testing of Bituminous Mixtures Utilizing Four Inch Marshall Apparatus
ARIZ 411a Determination of Bituminous Distributor Truck Transverse Spread Rate
ARIZ 412b Density of Compacted Bituminous Mixtures by the Nuclear Method
ARIZ 413 Extraction of Asphalt from Bituminous Mixtures by Soxhlet Extraction
ARIZ 415d Bulk Specific Gravity and Bulk Density of Compacted Bituminous Mixtures
ARIZ 416e Preparing and Splitting Field Samples of Bituminous Mixtures for Testing
ARIZ 417e Maximum Theoretical Specific Gravity and Density of Field Produced Bituminous Mixtures (Rice Test)
ARIZ 421 Bituminous Material Content of Asphaltic Concrete Mixtures by the Nuclear Method
ARIZ 422 Compaction and Testing of Bituminous Mixtures Utilizing 152.4 mm (Six Inch) Marshall Apparatus
ARIZ 424d Determination of Air Voids in Compacted Bituminous Mixtures
ARIZ 427a Asphalt Binder Content of Asphaltic Concrete Mixtures by the Ignition Furnace Method
ARIZ 428 Asphalt Binder Content of Asphaltic Concrete Mixtures Containing Reclaimed Asphalt Pavement (RAP) by the Ignition Furnace Method

** The above Arizona Test Methods, and also commonly used AASHTO procedures in this category, are show on Series 400 Cover Sheet (December 4, 2015).

SERIES 500 BITUMINOUS MATERIALS**

ARIZ 502b Percentage of Uncoated Particles Using Asphalt Emulsions
ARIZ 504 Vacuum Recovery of Asphalt Emulsion Residue
ARIZ 505a Asphalt Rejuvenating Agent Residue Insoluble in Petroleum Ether
ARIZ 509a Rapid Determination of Asphaltenes and Chemical Reactivity of Asphalts
ARIZ 511 Recovery of Asphalt from Extraction Solution
ARIZ 512b Residue by Evaporation

** The above Arizona Test Methods, and also commonly used AASHTO and ASTM procedures and specifications are shown on Series 500 Cover Sheet (December 4, 2015).

SERIES 600 CEMENT AND RELATED MATERIALS**

** Commonly used AASHTO and ASTM procedures in this category are show on Series 600 Cover Sheet (July 15, 2005).

SERIES 700 CHEMICAL AND SPECIALTY**

ARIZ 702a Testing of Paint, Varnish, Lacquer, and Related Material
ARIZ 714b Sampling and Sieving of Crumb Rubber
ARIZ 719c Heating and Drying Materials in Microwave Oven
ARIZ 725a Tensile Proof Dowel Test
ARIZ 726a Reflectance, Dry Opacity, and Yellowness Index of Traffic Paint
ARIZ 727a Chloride in Hardened Concrete
ARIZ 729b Exchangeable Sodium in Topsoil
ARIZ 732a Calcium Carbonate in Topsoil (Neutralization Potential of Topsoil)
ARIZ 733b Sulfate in Soils
ARIZ 734 Determination of Portland Cement Content in Cement Treated Base Material
ARIZ 735a Testing of Thermoplastic Pavement Marking Material
ARIZ 736b Chloride in Soils
ARIZ 738 Chloride in Concrete Admixtures
ARIZ 742 Mean Macrotexture Depth of Milled Pavement

ARIZ 743 Titanium Dioxide in Paints and Thermoplastics
ARIZ 744 Rock Salt in Crash Barrel Sand

** The above Arizona Test Methods, and also commonly used AASHTO and ASTM procedures in this category are show on Series 700 Cover Sheet (December 4, 2014).

SERIES 800 DESIGN**

ARIZ 801a Evaluation of Profiles
ARIZ 802g Effect of Water on Strength of Compacted Bituminous Mixtures (Immersion Compression Test)
ARIZ 805b Centrifuge Kerosene Equivalent of Aggregate, Including K-Factor
ARIZ 806e Maximum Theoretical Specific Gravity of Laboratory Prepared Bituminous Mixtures (Rice Test)
ARIZ 807 Design of Slurry Seal
ARIZ 814a Design of Asphaltic Concrete Friction Course
ARIZ 815d Marshall Mix Design Method for Asphaltic Concrete
ARIZ 819a Design of Exposed Aggregate Seal Coats
ARIZ 822 Determination of Additive or Asphalt Blend Required for Modification of Asphalt Viscosity
ARIZ 825a Method of Test for Determining the Quantity of Asphalt Rejuvenating Agent Required for an Asphaltic Pavement
ARIZ 829a Evaluation of Pavement Smoothness
ARIZ 832a Marshall Mix Design Method for Asphaltic Concrete (Asphalt-Rubber) [AR-AC]
ARIZ 833 Marshall Mix Design Method for Asphaltic Concrete with Reclaimed Asphalt Pavement (RAP)

** The above Arizona Test Methods are also shown on Series 800 Cover Sheet (February 22, 2013).

SERIES 900 MATERIALS QUALITY ASSURANCE PROGRAM
(January 17, 2014)

Appendix A - Arizona Department of Transportation Local Public Agency Certification Acceptance Quality Assurance Requirements
Appendix B - Final Certification of Materials for Consultant Administered Projects

Appendix C - Sampling Guide Schedule
Appendix D - Code of Federal Regulations (23 CFR 637, Subpart B) "Quality Assurance Procedures for Construction"

SERIES 1000 CERTIFICATES (July 7, 2014)

APPENDIX

APPENDIX A1 Rounding Procedure (December 4, 2015)
APPENDIX A2 Metric Guide (July 15, 2005)
APPENDIX A3 Equipment Calibration and Verification (September 28, 2012)

SERIES 100

SAMPLING

The following methods shall be performed in accordance with the respective designation:

ARIZONA TEST METHODS:

TITLE	DESIGNATION
Sampling Bituminous Materials……	ARIZ 103b
Sampling Bituminous Mixtures……	ARIZ 104e
Sampling Soils and Aggregates……..	ARIZ 105f
Sampling Hydrated Lime and Lime Products……..	ARIZ 108
Sampling Metallic Materials……	ARIZ 109
Sampling Miscellaneous Materials…….	ARIZ 110

NOTE: Sampling of crumb rubber is performed in accordance with Arizona Test Method 714.

AASHTO TEST METHODS:

TITLE	DESIGNATION
Sampling Freshly Mixed Concrete …….	R 60
Sampling and Amount of Testing of Hydraulic Cement ……..	T 127
Reducing Samples of Aggregate to Testing Size……	T 248

NOTE: It shall be assured that the appropriate methods as given in the project requirements are being adhered to.

NOTE: Refer to Series 900, “Materials Quality Assurance Program”, of the Materials Testing Manual for current guidelines on sampling of materials for acceptance, independent assurance, and correlation testing.

SERIES 200

SOILS AND AGGREGATES

The following test methods and standards shall be performed in accordance with the respective designation:

ARIZONA TEST METHODS:

TITLE	DESIGNATION
Sieving of Coarse and Fine Graded Soils and Aggregates	ARIZ 201d
Composite Grading	ARIZ 205c
Specific Gravity and Absorption of Coarse Aggregate	ARIZ 210b
Specific Gravity and Absorption of Fine Aggregate	ARIZ 211e
Percentage of Fractured Coarse Aggregate Particles	ARIZ 212e
Determination of Cement Content Required for Cement Treated Mixtures	ARIZ 220
Moisture-Density Relations of Cement Treated Mixtures	ARIZ 221
Rock Correction Procedure for Maximum Density Determination of Cement Treated Mixtures	ARIZ 222b
Field Density of Cement Treated Mixtures by Sand Cone Method or by Rubber Balloon Method	ARIZ 223
Maximum Dry Density and Optimum Moisture of Soils by Proctor Method A	ARIZ 225b
Maximum Density and Optimum Moisture of Soils – Methods C and D	ARIZ 226
Rock Correction Procedure for Maximum Dry Density and Optimum Moisture Content Determination	ARIZ 227c

ARIZONA TEST METHODS: (continued)

TITLE	DESIGNATION
Calibration of Standard Sand and Sand Cone	ARIZ 229a
Field Density by the Sand Cone Method	ARIZ 230a
Moisture-Density Relationship Using Typical Moisture-Density Curves (One Point Proctor) Method A	ARIZ 232b
Flakiness Index of Coarse Aggregate	ARIZ 233d
Density and Moisture Content of Soil and Soil-Aggregate Mixtures by the Nuclear Method	ARIZ 235
Determining pH and Minimum Resistivity of Soils and Aggregates	ARIZ 236c
Determining pH and Soluble Salts of Soils	ARIZ 237b
Percent Carbonates in Aggregate	ARIZ 238a
Sieve Analysis and Separation of Salvaged AC Pavement Particles for Recycled Asphaltic Concrete	ARIZ 240a
Compressive Strength of Molded Cement Treated Base or Soil-Cement Specimens	ARIZ 241a
Sand Equivalent Test for Mineral Aggregate for Asphaltic Concrete Friction Course	ARIZ 242a
Artificial Grading of Mineral Aggregate	ARIZ 244
Maximum Dry Density and Optimum Moisture of Soils by Proctor Alternate Method D	ARIZ 245a
Moisture-Density Relationship using Typical Moisture-Density Curves (One Point Proctor) Alternate Method D	ARIZ 246b

ARIZONA TEST METHODS: (continued)

TITLE	DESIGNATION
Particle Shape and Texture of Fine Aggregate Using Uncompacted Void Content	ARIZ 247b
Alternate Procedures for Sieving of Coarse and Fine Graded Soils and Aggregates	ARIZ 248
Remolded Ring Samples for Direct Shear, Swell, and Consolidation	ARIZ 249
Combined Coarse and Fine Aggregate Specific Gravity and Absorption	ARIZ 251a

AASHTO STANDARDS:

TITLE	DESIGNATION
Dry Preparation of Disturbed Soil and Soil-Aggregate Samples for Test	R 58
Bulk Density ("Unit Weight") and Voids in Aggregate	T 19
Determining the Liquid Limit of Soils	T 89
Determining the Plastic Limit and Plasticity Index of Soils	T 90
Resistance to Degradation of Small-Size Coarse Aggregate by Abrasion and Impact in the Los Angeles Machine.....	T 96
Soundness of Aggregate by Use of Sodium Sulfate or Magnesium Sulfate	T 104
Wetting-and-Drying Test of Compacted Soil-Cement Mixtures	T 135
Freezing-and-Thawing Tests of Compacted Soil-Cement Mixtures	T 136

AASHTO STANDARDS: (continued)

TITLE	DESIGNATION
Plastic Fines in Graded Aggregates and Soils by Use of the Sand Equivalent Test	T 176
Resistance R-Value and Expansion Pressure of Compacted Soils	T 190
Determination of Moisture in Soils by Means of a Calcium Carbide Gas Pressure Moisture Tester	T 217
Determination of Strength of Soil-Lime Mixtures	T 220
Reducing Field Samples of Aggregates to Testing Size	T 248
Total Evaporable Moisture Content of Aggregate by Drying	T 255
Laboratory Determination of Moisture Content of Soils	T 265

NOTE: It shall be assured that the appropriate test methods and standards as given in the project requirements are being adhered to.

SERIES 400

BITUMINOUS MIXTURES

The following test methods shall be performed in accordance with the respective designation:

ARIZONA TEST METHODS:

TITLE	DESIGNATION
Moisture Content of Bituminous Mixtures…….	ARIZ 406d
Compaction and Testing of Bituminous Mixtures Utilizing Four Inch Marshall Apparatus…….	ARIZ 410f
Determination of Bituminous Distributor Truck Transverse Spread Rate……	ARIZ 411a
Density of Compacted Bituminous Mixtures by the Nuclear Method…….	ARIZ 412b
Extraction of Asphalt from Bituminous Mixtures by Soxhlet Extraction……..	ARIZ 413
Bulk Specific Gravity and Bulk Density of Compacted Bituminous Mixtures……..	ARIZ 415d
Preparing and Splitting Field Samples of Bituminous Mixtures for Testing……	ARIZ 416e
Maximum Theoretical Specific Gravity and Density of Field Produced Bituminous Mixtures (Rice Test)……..	ARIZ 417e
Bituminous Material Content of Asphaltic Concrete Mixtures by the Nuclear Method……	ARIZ 421
Compaction and Testing of Bituminous Mixtures Utilizing 152.4 mm (Six Inch) Marshall Apparatus……	ARIZ 422

ARIZONA TEST METHODS: (continued)

TITLE	DESIGNATION
Determination of Air Voids in Compacted Bituminous Mixtures……..	ARIZ 424d
Asphalt Binder Content of Asphaltic Concrete Mixtures by the Ignition Furnace Method…….	ARIZ 427a
Asphalt Binder Content of Asphaltic Concrete Mixtures Containing Reclaimed Asphalt Pavement (RAP) by the Ignition Furnace Method……	ARIZ 428

AASHTO TEST METHODS:

TITLE	DESIGNATION
Quantitative Extraction of Asphalt Binder from Hot Mix Asphalt (HMA)……..	T 164
Preparing and Determining the Density of Asphalt Mixture Specimens by Means of the Superpave Gyratory Compactor.....	T 312

NOTE: It shall be assured that the appropriate test methods as given in the project requirements are being adhered to.

ADOT Intermodal Transportation

December 4, 2015
(3 Pages)

SERIES 500

BITUMINOUS MATERIALS

The following test methods and specifications shall be adhered to in accordance with the respective designation:

ARIZONA TEST METHODS:

TITLE	DESIGNATION
Percentage of Uncoated Particles Using Asphalt Emulsions	ARIZ 502b
Vacuum Recovery of Asphalt Emulsion Residue	ARIZ 504
Asphalt Rejuvenating Agent Residue Insoluble in Petroleum Ether	ARIZ 505a
Rapid Determination of Asphaltenes and Chemical Reactivity of Asphalts	ARIZ 509a
Recovery of Asphalt from Extraction Solution	ARIZ 511
Residue by Evaporation	ARIZ 512b

AASHTO AND ASTM TEST METHODS AND SPECIFICATIONS:

TITLE	DESIGNATION AASHTO	DESIGNATION ASTM
Cutback Asphalt (Medium-Curing Type)	M 82	
Performance Graded Asphalt Binder	M 320	
Accelerated Aging of Asphalt Binder Using a Pressurized Aging Vessel (PAV)	R 28	
Solubility of Bituminous Materials	T 44	
Flash and Fire Points by Cleveland Open Cup	T 48	
Penetration of Bituminous Materials	T 49	

AASHTO AND ASTM TEST METHODS AND SPECIFICATIONS: (Continued)

TITLE	DESIGNATION AASHTO	DESIGNATION ASTM
Float Test for Bituminous Materials	T 50	
Ductility of Bituminous Materials	T 51	
Softening Point of Bitumen (Ring and Ball Apparatus)	T 53	
Water in Petroleum Products and Bituminous Materials by Distillation	T 55	
Testing Emulsified Asphalts	T 59	
Saybolt Viscosity	T 72	
Distillation of Cut - Back Asphaltic (Bituminous) Products	T 78	
Flash Point with Tag Open-Cup Apparatus for Use with Material Having a Flash Less Than 93.3 °C (200 °F)	T 79	
Spot Test of Asphaltic Materials	T 102	
Kinematic Viscosity of Asphalts	T 201	
Viscosity of Asphalts by Vacuum Capillary Viscometer	T 202	
Specific Gravity of Semi-Solid Bituminous Materials	T 228	
Effect of Heat and Air on a Moving Film of Asphalt (Rolling Thin Film Oven Test)	T 240	
Elastic Recovery Test of Bituminous Materials by Means of a Ductilometer	T 301	
Determining the Flexural Creep Stiffness of Asphalt Binder Using the Bending Beam Rheometer (BBR)	T 313	

AASHTO AND ASTM TEST METHODS AND SPECIFICATIONS: (Continued)

TITLE	DESIGNATION AASHTO	DESIGNATION ASTM
Determining the Fracture Properties of Asphalt Binder in Direct Tension (DT)	T 314	
Determining the Rheological Properties of Asphalt Binder Using a Dynamic Shear Rheometer (DSR)	T 315	
Viscosity Determination of Asphalt Binder Using Rotational Viscometer	T 316	
Characteristic Groups in Rubber Extender and Processing Oils and Other Petroleum-Derived Oils by the Clay-Gel Absorption Chromatographic Method		D 2007
Solubility of Asphalt Binders in Toluene by Centrifuge		D 5546

NOTE: It shall be assured that the appropriate test methods and specifications as given in the project requirements are being adhered to.

SAMPLING BITUMINOUS MATERIALS

(An Arizona Method)

1. SCOPE

1.1 This procedure covers best practices for sampling of Bituminous materials (paving grade asphalt, crumb rubber asphalt and emulsions) in the field.

1.2 This test method may involve hazardous material, operations, or equipment. This test method does not purport to address all of the safety concerns associated with its use. It is the responsibility of the user to consult and establish appropriate safety and health practices and determine the applicability of any regulatory limitations prior to use.

1.3 For the purpose of this test method Bituminous materials other than Emulsions will be referred to as “Asphalt Binder”, and Emulsified Bituminous material i.e. (RS-1, SS-1, CSS-1, etc…) will be referred to as “Emulsions”.

2. SIZE OF SAMPLES

2.1 A minimum of 1 gal. of Asphalt Binder.

2.2 A minimum of two ½ gal. containers per sample of Emulsions.

3. CONTAINERS

3.1 Containers for Asphalt Binder, shall be double friction top cans.

3.2 Containers for Emulsion samples shall be wide mouth containers made of plastic.

4. PROTECTION AND PRESERVATION OF SAMPLES

4.1 Containers shall be new and free of any moisture, contaminants, or residue from any manufacturing process. The top and container shall fit together tightly.

4.2 The container shall be tightly sealed immediately after obtaining the sample.

4.3 The filled sample container shall not be cleaned using a solvent. If cleaning is necessary use a clean dry cloth.

4.4 Samples of Emulsion shall be protected from freezing.

4.5 Transferring samples from one container to another shall be avoided if possible.

4.6 Sample containers shall be identified using sample tags that are securely fastened to the side of the container so they will not be lost in transit, and shall be clearly marked for identification with a suitable permanent marker on the side of the container itself.

5. PROCEDURE

5.1 Samples of Asphalt Binder shall be taken from the last possible point before the bituminous material is introduced into the hot plant. This is usually from a spigot or faucet on the circulation line.

5.2 Bituminous materials applied to pavement surfaces, i.e. Tack Coat, Fog Coat shall be sampled from the distributor truck at the project.

5.3 Clearly identify the side (not the lid) of a new clean container of appropriate size with the sample number, date, project number, type of material, and any other pertinent information.

5.4 To ensure the sample is representative, draw off and discard a minimum of 1 gal. of Bituminous material prior to obtaining the sample from the sampling valve.

5.5 From the sampling valve draw off the minimum amount of Bituminous material required for the type of material being sampled. Care should be taken to avoid spilling any material on the outside of the container or over filling the container. The container should be filled to no closer than one inch from the top.

5.6 Immediately after obtaining the sample, the clearly identified container shall be tightly and positively sealed.

SIEVING OF COARSE AND FINE GRADED SOILS AND AGGREGATES

(An Arizona Method)

1. SCOPE

1.1 This procedure describes the method for sieving and determining the sieve analysis of fine and coarse graded soils and aggregates, including the determination of minus No. 200 material by elutriation.

1.2 The procedure for sample preparation, sieving, and calculating the sieve analysis which is given in Sections 3 through 10 applies in general for all sieving operations. Section 11 gives a brief outline of the procedure for performing the sieve analysis when the sample is dried to constant weight prior to sieving. Section 12 gives an outline and description of the procedure for performing the sieve analysis when the sample is not dried to constant weight prior to sieving. Additional methods are given in Arizona Test Method 248, "Alternate Procedures for Sieving of Coarse and Fine Graded Soils and Aggregates".

1.3 A washed gradation, utilizing an appropriate alternate procedure as described in either Alternate #1, 3, 4, or 5 of ARIZ 248, is to be used for all soil and aggregate materials with specification requirements for gradation. The washing requirement may be waived if the Engineer determines that it is unnecessary. However, in cases of dispute, the referee method shall be a washed gradation. Composited samples of mineral aggregate for bituminous mix designs shall be tested in accordance with either Alternate #3, 4, or 5 of ARIZ 248. If desired, the washed gradation of samples from individual stockpiles or bins may be determined and used in calculating the composite gradation.

1.4 This test method may involve hazardous materials, operations, or equipment. This test method does not purport to address all of the safety concerns associated with its use. It is the responsibility of the user to consult and establish appropriate safety and health practices and determine the applicability of any regulatory limitations prior to use.

2. APPARATUS

2.1 Requirements for the frequency of equipment calibration and verification are found in Appendix A3 of the Materials Testing Manual.

2.2 Sieves of sizes as required for screening, conforming to the requirements of AASHTO M 92.

2.3 Any mechanical shaker may be used which produces the required thoroughness of sieving, as specified in Subsection 4.5.

2.4 Balances or scales - Conforming to the requirements of AASHTO M 231, except when determining weights of 5000 grams or less, the readability and sensitivity shall be at least one gram; and when determining weights of greater than 5000 grams, the readability and sensitivity shall be at least 20 grams.

2.5 Sample splitters - Shall conform to the requirements of, and be used in accordance with the procedures given in, AASHTO T 248.

2.6 Heating/Drying Device - An oven or suitable heating device which is capable of drying samples without aggregate breakage or loss of material due to splattering. A microwave oven may be used to dry materials, provided proper attention is given to the use of apparatus and the intensity of heat generated.

2.7 Brass wire brush for cleaning fine sieves coarser than No. 100, and a soft bristle brush for sieves No. 100 and No. 200.

2.8 A suitable mechanical washing device with No. 200 mesh wire (Similar to Figure 1) for performing washing of fine soils and aggregates as described in Section 6, equipped with a metal tube(s) connected to a water and an air outlet; or a vessel of sufficient capacity and a nest of No. 16 and No. 200 sieves for use with the hand washing method. When utilizing mechanical washing equipment, the provision for air may be eliminated if the water pressure provides adequate agitation to wash sample as specified in Section 6.

2.9 Miscellaneous pans, scoops, spatulas, brushes, pulverizing equipment, etc. for preparing, washing, and drying samples.

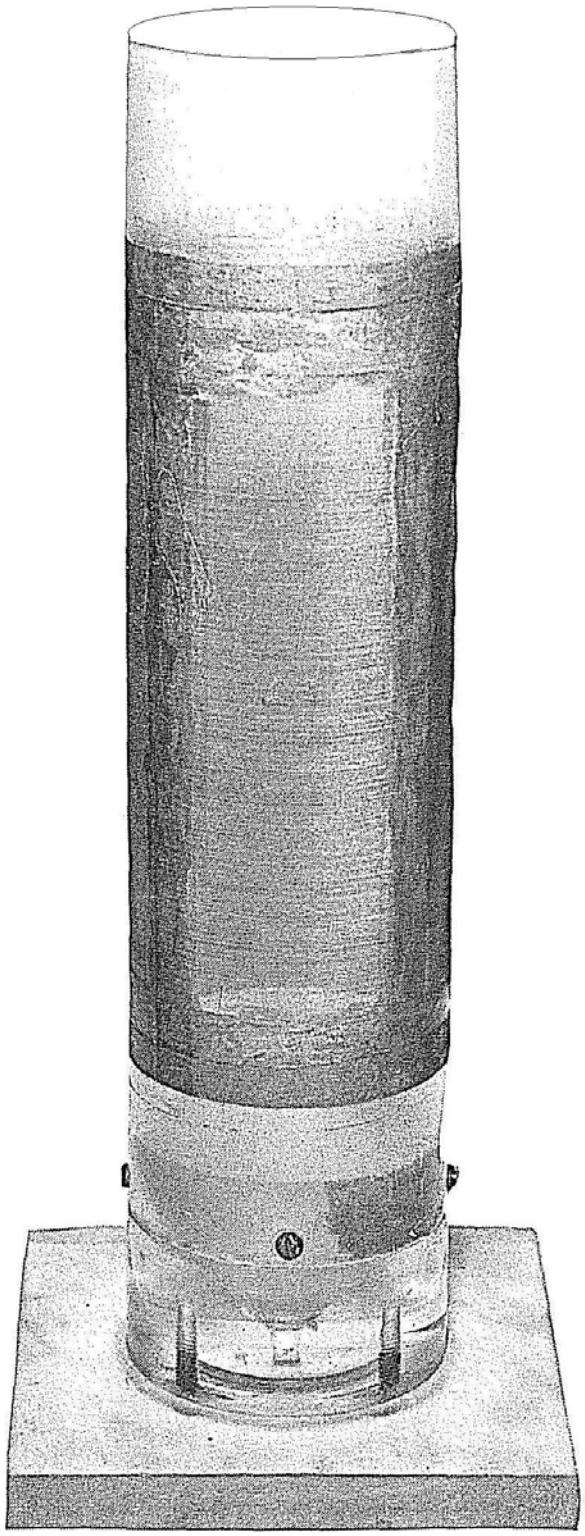

FIGURE 1

3. SAMPLE PREPARATION

3.1 A representative sample of the amount indicated in Subsection 3.2 below shall be obtained. Dry the sample sufficiently to permit separation of particles on the No. 4 and larger sieves, and to develop a free-flowing condition in the portion passing the No. 4 sieve. The use of sunlight, ovens, fans, or warm air are the most common drying methods. Turn the sample frequently to prevent formation of hard clay lumps. If the sample contains hard clods or coated coarse aggregate particles, break up the clods by means which will not reduce the size of any rock. (The use of a rubber covered mallet or the raking of the material over an old screen have been found to be satisfactory methods.) When subsequent testing is to be performed on the material, it shall be assured that any temperature restrictions, as given in the appropriate test method(s), are not exceeded. A number of soil and aggregate tests, such as plasticity index, proctor maximum density, and sand equivalent, require that samples not be heated in excess of 140 °F.

3.2 If necessary, samples shall be reduced in size in accordance with the splitting or quartering methods in AASHTO T 248 to obtain the appropriate sample size as shown below.

Nominal Maximum Size of Particle *	Minimum Weight of Sample, grams (lbs.)
3/8”	1000 (2.2)
1/2”	2000 (4.4)
3/4”	5000 (11)
1”	10000 (22)
1-1/2”	15000 (33)
2”	20000 (44)
2-1/2”	25000 (55)
3”	30000 (66)
3” Slot	35000 (77)

*The smallest sieve opening through which the entire amount of material, by specification, is permitted to pass.

3.3 If desired, the sample may be dried to constant weight. The sample may be considered to be at constant weight when, after an initial drying period of at least one hour, further drying causes or would cause less than 0.1% additional loss in weight within a five minute drying period. If desired, the material may be dried to constant weight utilizing a microwave oven in accordance with Subsection 2.6.

3.4 Allow the sample to cool, if necessary, and record the weight of the material.

4. COARSE SIEVING

4.1 Normally the coarse sieving of material is performed utilizing the No. 4 sieve as the smallest sieve.

4.2 When material being screened contains a large amount of passing No. 4 material, such that there may be overloading in the bottom pan during shaking operations, the sample shall be initially sieved over a No. 4 sieve to separate excess amounts of this material. This passing No. 4 material is saved and combined with the remaining portion of passing No. 4 material from subsequent coarse sieving. When material contains large rocks that are not to be sieved in the nest of coarse sieves during the actual shaking operation, the sample shall be pre-sieved to separate these particles. Unless all material will pass the largest sieve in the nested sieves, the material shall be pre-sieved over a sieve of the next larger size than that of the largest sieve size being utilized in the nested sieves. Large rocks separated in this manner are individually tested for passing the appropriate sieve, determining and recording the weight of any rock retained on these sieves.

4.3 Empty the sample into the nest of sieves that is to be used for screening material. If pre-sieving has not been performed, remove any particles which may be retained on the top sieve and test these for passing the appropriate sieve, determining and recording the weight of any rock retained on these sieves.

4.4 The material shall be subjected to sieving by hand or in a mechanical sieve shaker. The sieving action shall cause the particles to bounce and turn so as to present different orientations to the sieving surface. No particles shall be hand manipulated for passing any of the nested sieves. The sieving shall be of sufficient time to assure that the criteria for “thoroughness of sieving” described in Subsection 4.5 below is achieved.

4.5 The criteria for "thoroughness of sieving" is that after completion of sieving, not more than 0.5 percent by weight of the total sample passes any sieve during one minute of continuous hand sieving in an 8 inch or 12 inch sieve as appropriate. If the thoroughness of sieving is being determined for sieves larger than 12 inches, the material retained on the respective sieve, or portions of that material shall be placed in a 12 inch sieve of the same sieve size opening, so as to not overload the sieve. Hold the individual sieve, provided with a snug fitting

pan and cover, in a slightly inclined position in one hand. Strike the side of the sieve sharply and with an upward motion against the heel of the other hand at the rate of about 150 times per minute, turn the sieve about one-sixth of a revolution at intervals of about 25 strokes. A frequent check should be performed to assure that the thoroughness of sieving specified is being maintained in sieving operations.

4.6 Overloading of sieves shall be avoided. The quantity of material on a given sieve at the completion of sieving shall not exceed the amount shown in the table below. As the weight retained on each individual sieve size is determined, it should be compared with the corresponding overloading criteria prior to combining the weighed material. If overloading occurs, proper corrective action to regulate the amount of material on a sieve shall be taken. This may be accomplished by splitting the material which is retained on the overloaded sieve, resieving each portion, and combining weights.

Sieve Size	Maximum Weight Allowed (grams/ sq. in.)	Maximum Weight Allowed (grams)	
		12” Dia. Sieve	14-3/4” x 22-3/4” Sieve
3”	*	*	*
2-1/2”	*	*	*
2”	*	*	*
1-1/2”	25	2827	8389
1”	18	2036	6040
3/4”	14	1583	4698
1/2”	10	1131	3356
3/8”	8	905	2685
1/4”	6	679	2013
No. 4	5	565	1678

*Normally particles of material retained on these sieves are tested individually, so no maximum weight allowed is specified.

4.7 Starting with the largest of the nested sieves, the material retained on each sieve and in the bottom pan is weighed and recorded.

4.8 Do not discard any of the sieved material until the sum of the individual weights is compared to the weight of sample prior to sieving. If the difference between the two weights is less than or equal to 1.0% of the weight of sample prior to sieving, an adjustment in weight shall be made on the sieve which has the

largest weight retained, except no adjustments shall be made on the minus No. 4 material. If the difference is greater than 1.0%, the sample shall be recombined, resieved, and carefully reweighed.

5. SAMPLE FOR ELUTRIATION AND FINE SIEVING

5.1 A representative minimum 500 gram sample of the passing No. 4 material from the coarse sieving shall be obtained by the use of a splitter in accordance with AASHTO T 248. The selection of an exact predetermined weight shall not be attempted. The sample size may be reduced if the minimum of 500 grams is not obtained from coarse sieving, or if there is insufficient material for performing other desired tests utilizing the pass No. 4 material. When utilizing the mechanical washing device, the requirement for a minimum 500 gram sample may be reduced to a minimum of 200 grams for materials that tend to clog the No. 200 sieve (for example, fine soils such as blow sand, silty soils, or clay).

5.2 The weight of the sample for elutriation and fine sieving is recorded to the nearest gram as “Dry Wt. Pass No. 4 Split”.

5.3 Subject the sample to elutriation by either mechanical washing (Section 6) or hand washing (Section 7).

6. MECHANICAL WASHING

6.1 This method is generally utilized for passing No. 4 material, although it may also be used with the alternate procedure described in Section 2 of Arizona Test Method 248 for testing materials containing small amounts of Plus No. 4 material (100% passing 3/8"). Generally, a maximum of 600 grams may be tested utilizing the mechanical washing device.

6.2 Fill the washing device with water to the bottom of the windows. Transfer the sample to the washing device, and wash all material clinging to the sample container into the washing device. Utilizing the water tube, and air tube if necessary, agitate the sample vigorously enough so that it causes the material to go into suspension, but not enough to cause splattering to reach the top of the cylinder. Continue this washing action, taking care that there is no loss of sample by splattering or overflowing. (If the No. 200 sieve tends to plug excessively, this may be overcome to some extent by tapping the washing device with the palm of the hand or by washing down the inside of the sieve with a low stream of water.) Washing shall continue until the wash water becomes clear.

6.3 Turn off the water and compressed air and remove the metal tube(s), rinsing clinging material back into the sample. Wash the sample into a container of sufficient capacity to hold the water and sample; allow the particles to settle and decant the excess water.

6.4 Dry the sample to constant weight at a temperature that will not cause the material to be lost due to splattering.

6.5 Allow the sample to cool, reweigh and record to the nearest gram as the fine sieve "Total Dry Weight".

6.6 Subtract the "Total Dry Weight" from the "Dry Wt. of Pass No. 4 Split", and record as the "Elutriation".

7. HAND WASHING (REFEREE METHOD)

7.1 Place the sample in a pan of sufficient size and capacity to allow washing without spillage. Cover with adequate water to thoroughly wash aggregate. Agitate the contents of the pan vigorously in order to completely separate all particles finer than the No. 200 sieve from the coarser particles, and to bring the finer material into suspension so that it will be removed by decantation of the water.

7.2 Decant the wash water through a nest of No. 16 and No. 200 sieves.

7.3 Repeat the washing and decanting cycle until the water becomes clear.

7.4 Thoroughly wash all material remaining on the No. 16 and the No. 200 sieves and return to the sample.

7.5 After the particles have settled in the pan, carefully decant any excess water, assuring that no particles are lost.

7.6 Dry the sample to constant weight at a temperature that will not cause material to be lost due to splattering.

7.7 Allow the sample to cool, reweigh and record to the nearest gram as the fine sieve "Total Dry Weight".

7.8 Subtract the “Total Dry Weight” from the “Dry Wt. of Pass No. 4 Split”, and record as the “Elutriation”.

8. SIEVING OF FINE AGGREGATE

8.1 Place the washed and dried fine aggregate sample into the top of the nested sieves, close the nest of sieves with lid.

8.2 The material shall be subjected to sieving by hand or in a mechanical sieve shaker. The sieving action shall cause the particles to bounce and turn so as to present different orientations to the sieving surface. No particles shall be hand manipulated for passing any of the nested sieves. The sieving shall be of sufficient time to assure that the criteria for "thoroughness of sieving" described in Subsection 4.5 is achieved.

8.3 Overloading of sieves shall be avoided. The quantity of material on a given sieve at the completion of sieving shall not exceed 4 grams per square inch of sieving area (201 grams for an 8 inch diameter sieve and 452 grams for a 12 inch sieve). As the weight retained on each individual sieve size is determined, it should be compared with the corresponding overloading criteria prior to combining the weighed material. If overloading occurs, proper corrective action to regulate the amount of material on a sieve shall be taken. This may be accomplished by splitting the material which is retained on the overloaded sieve, resieving each portion, and combining weights.

8.4 Starting with the largest of the nested sieves, the material retained on the individual sieves and in the bottom pan shall be weighed and recorded.

8.5 Do not discard any of the sieved material until the sum of the individual weights is compared to the weight of sample prior to sieving. If the difference between the two weights is less than or equal to 1.0% of the weight of sample prior to sieving, an adjustment in weight shall be made on the sieve which has the largest weight retained, except no adjustments shall be made on the minus No. 200 material. If the difference is greater than 1.0% the sample shall be recombined, resieved, and carefully reweighed.

9. PRECAUTIONS

9.1 Check sieves at least daily for broken or distorted wire, and replace any sieves found to be damaged or excessively worn.

9.2 Sieves not conforming to AASHTO M 92 must be replaced.

9.3 Do not repair wire cloth.

9.4 Clean sieves carefully after each shaking, using the proper instrument to reduce chances of damaging the mesh.

9.5 All mechanical equipment shall be inspected frequently and maintained by greasing, cleaning, and repair of worn out parts.

10. CALCULATIONS

10.1 The calculations for determining the sieve analysis are as follows. Examples of these calculations are given in Figures 2 and 3.

10.2 The calculations to determine the % passing values for the coarse sieve anaylsis are performed as described below:

10.2.1 For the largest sieve which has no material retained, record the percent passing as 100. Determine a factor for calculating the coarse sieve analysis by the following. Record the coarse sieve factor to at least six decimal places.

$$\text{Coarse Sieve Factor} = \frac{100}{\text{Coarse Sieve Total}}$$

10.2.2 The percent passing for each sieve in the coarse sieve analysis is determined by multiplying the weight retained on that sieve times the coarse sieve factor, and subtracting the result from the unrounded % passing for the next larger sieve, as shown below. Values for "weight retained times the coarse sieve factor" and "percent passing each sieve" shall be determined and used in the calculations to at least six decimal places. The percent passing value for each sieve is recorded in the sieve analysis to the nearest whole percent.

$$\begin{matrix}\text{Percent}\\ \text{Passing}\\ \text{Desired}\\ \text{Sieve}\end{matrix} = \begin{pmatrix}\text{Unrounded}\\ \text{\% Pass for}\\ \text{next larger}\\ \text{sieve}\end{pmatrix} - \begin{pmatrix}\text{Weight}\\ \text{Retained}\\ \text{on Desired}\\ \text{Sieve}\end{pmatrix} \text{x} \begin{pmatrix}\text{Coarse}\\ \text{Sieve}\\ \text{Factor}\end{pmatrix}$$

10.2.3 As a check on the coarse sieve analysis, multiply the weight of minus No. 4 material times the coarse sieve factor, as shown below. The result of this calculation, rounded to the nearest whole percent, should be the same as the value for percent passing the No. 4 sieve determined in the paragraph above.

$$\begin{matrix}\text{Check for Percent}\\ \text{Passing No. 4}\end{matrix} = \begin{pmatrix}\text{Wt. of Pass}\\ \text{No. 4 sieve}\end{pmatrix} \text{ x } \begin{pmatrix}\text{Coarse}\\ \text{Sieve}\\ \text{Factor}\end{pmatrix}$$

10.3 The calculations to determine the % passing values for the fine sieve analysis are performed as described below:

10.3.1 Determine a factor for the fine sieve analysis by dividing the percent passing the No. 4 sieve (which has been recorded to the nearest whole percent) by the "Dry Weight of Pass #4 Split", as shown below. Record the fine sieve factor to at least six decimal places. If all the pass No. 4 material from coarse sieving was subjected to elutriation and fine sieving, a fine sieve factor is not determined. Rather, the coarse sieve factor is utilized and the calculation of the percent passing each sieve is continuous through the entire sieve analysis.

$$\text{Fine Sieve Factor} = \frac{\text{Rounded Percent Pass No. 4}}{\text{Dry Wt. of Pass No. 4 Split}}$$

10.3.2 The percent passing for each sieve in the fine sieve analysis is determined by multiplying the weight retained on that sieve times the fine sieve factor, and subtracting the result from the unrounded % passing the next larger sieve, with the exception of the percent passing the No. 4 which has previously been recorded to the nearest whole percent. The equation for determining the percent passing each sieve is shown below. Values for "weight retained times the fine sieve factor" and "percent passing each sieve" shall be determined and used in the calculations to at least six decimal places. The percent passing value for each sieve is recorded in the sieve analysis to the nearest whole percent, except the percent passing the No. 200 sieve is recorded to the nearest 0.1 percent.

$$\begin{matrix}\text{Percent}\\ \text{Passing}\\ \text{Desired}\\ \text{Sieve}\end{matrix} = \begin{pmatrix}\text{Unrounded}\\ \text{\% Pass for}\\ \text{next Larger}\\ \text{sieve}\end{pmatrix} - \begin{pmatrix}\text{Weight}\\ \text{Retained}\\ \text{on Desired}\\ \text{Sieve}\end{pmatrix} \text{ x } \begin{pmatrix}\text{Fine}\\ \text{Sieve}\\ \text{Factor}\end{pmatrix}$$

10.3.3 As a check on the fine sieve analysis, the weight of material passing the No. 200 from sieving is added to the elutriation weight, and this total is multiplied times the fine sieve factor, as shown below. The result of this calculation, rounded to the nearest 0.1 percent, should be the same as the value for the percent passing the No. 200 determined in the paragraph above.

$$\begin{matrix}\text{Check for Percent}\\ \text{Passing No. 200}\end{matrix} = \begin{pmatrix}\text{Weight of}\\ \text{Passing}\\ \text{No. 200}\end{pmatrix} + \begin{pmatrix}\text{Elutriation}\\ \text{Weight}\end{pmatrix} \text{ x } \begin{pmatrix}\text{Fine}\\ \text{Factor}\end{pmatrix}$$

10.4 If desired, obtain the percent retained on each sieve by subtracting the rounded % passing value for that sieve from the rounded % passing value for the next larger sieve, as shown below.

$$\begin{matrix}\text{\% Retained}\\ \text{for Desired}\\ \text{Sieve}\end{matrix} = \begin{pmatrix}\text{Rounded \%}\\ \text{Pass Next}\\ \text{Larger Sieve}\end{pmatrix} - \begin{pmatrix}\text{Rounded \%}\\ \text{Pass the}\\ \text{Desired Sieve}\end{pmatrix}$$

10.5 Other methods may be used that differ from that specified in Subsections 10.2 and 10.3 above to determine % passing each sieve, so long as the method utilized has been proven to give equivalent results. However, any procedure which includes recording percent retained values prior to completing the calculation of all percent passing values is not allowed.

11. PROCEDURE WHEN SAMPLE IS DRIED TO CONSTANT WEIGHT PRIOR TO SIEVING

11.1 The following is a brief outline of the procedure to be used when the sample is dried to constant weight prior to sieving. An example of this procedure is shown in Figure 2.

11.2 Prepare sample, dry to constant weight, allow to cool, and record as “Coarse Sieve Total”, (3087 in the example).

11.3 Perform coarse sieving.

11.4 Record the weight of the material in the appropriate “Weights Retained” box for each sieve and the pan.

11.5 Sum the individual weights retained for each sieve, compare to the weight of sample prior to sieving (Coarse Sieve Total), and adjust or resieve as necessary.

11.6 Split the pass No. 4 material to at least 500 grams and record as "Dry Wt. of Pass No. 4 Split", (533).

11.7 Perform elutriation on the dry - #4 split, dry back to constant weight, allow to cool, and record as the "Total Dry Weight", (491).

ARIZONA DEPARTMENT OF TRANSPORTATION
SOIL AND AGGREGATE TABULATION

USE CAPITAL LETTERS

LAB NUMBER	ORG NUMBER	MATL	TYPE	PUR-POSE	TEST LAB	SIZE	SIZE %
15-6666	9999	MA	12	A	P		

TEST NO.	LOT OR SUFFIX	SAMPLED BY	MO	DAY	YEAR	TIME
17		A. JONES	11	16	14	9:25 MILITARY TIME

SAMPLED FROM	LIFT NO.	RDWY	STATION
COLD FEED			IF MILEPOST, INPUT DECIMAL

ORIGINAL SOURCE	PROJECT ENGINEER / SUPERVISOR	PROJECT NUMBER	TRACS NUMBER
CM # 4444	B. SMITH	F-099-9 (99)	H999901C

REMARKS

EXAMPLE FOR PROCEDURE WHEN SAMPLE IS DRIED TO CONSTANT WEIGHT PRIOR TO SIEVING - (SECTION 11)

CONTACT PHONE NO. - (555)555-5555

ARIZ 201
☐ Dried to Constant Wt.
☐ Not Dried to Constant Wt.

ARIZ 248
☐ Alt. 1 ☐ Alt. 2 ☐ Alt. 3
☐ Alt. 4 ☐ Alt. 5

% OVERSIZE: +3" ; +6"

COARSE FACTOR: 032394 = 100 / COARSE SIEVE TOTAL

WET SAMPLE PREWEIGHT = _____
WET WT. OF - # 4 = _____
- # 4 SPLIT WET WT. = _____

	WEIGHTS RETAINED	% RET.	% PASS	SPECS.	CUMULATIVE % RET. FINENESS MODULUS
3"					
2 1/2"					
2"					
1 1/2"					
1"					
3/4"	0		100	100	
1/2"	92	3	97	89-100	
3/8"	568	18	79	70-82	
1/4"	354	12	67		
# 4	401	13			
- # 4	1672		54		
Total	3087				

IF TOTAL SAMPLE IS WASHED:
UNWASHED WT. = _____
WASHED WT. = _____
ELUTRIATION = _____

DRY WT. OF - # 4 SPLIT: 533
FINE FACTOR: 101313 = % PASS # 4 / DRY WT. OF - # 4 SPLIT

	WEIGHTS RETAINED	% RET.	% PASS	SPECS.
#8	89	9	45	40-52
#10	56	6	39	
#16	103	10	29	
#30	68	7	22	
#40	40	4	18	13-23
#50	45	5	13	
#100	51	5	8	
#200	37	3		
-#200	2		4.5	2.4-6.0
Total	491 (Dry Weight)			
Elutriation	42			

= #4 Split - Total Dry Weight

FINENESS MODULUS = TOTAL CUMULATIVE % RET. / 100

T = AASHTO Tests

				SPECS.
Liquid Limit (LL)	T - 89			
Plastic Limit (PL)	T - 90			
Plasticity Index (PI) = LL - PL	T - 90			
Abrasion Method (A,B,C,D)	T - 96			
@ 100 Revolutions			%	%
@ 500 Revolutions			%	%
Absorption, H_2O	ARIZ 210 ARIZ 211		%	
Specific Gravity, SSD	ARIZ 210 ARIZ 211			
Specific Gravity, OD	ARIZ 210 ARIZ 211			
Specific Gravity, Apparent	ARIZ 210 ARIZ 211			
Proctor Method				A - ARIZ 225; C - ARIZ 226; D - ARIZ 226; AD - ARIZ 245; A1 - ARIZ 232; AD1 - ARIZ 246
Optimum Moisture			%	
Max. Dry Density			PCF	
Sand Equivalent	T - 176 ARIZ 242 (MAFC)			
At Least One Fractured Face	ARIZ 212		%	%
At Least Two Fractured Faces	ARIZ 212		%	%
Uncompacted Void Content	ARIZ 247		%	%
Moisture Content	T - 255 T - 265		%	
Flakiness Index	ARIZ 233		%	%
Carbonates	ARIZ 238		%	%
pH	ARIZ 236 OR 237			
Resistivity (ohm-cm)	ARIZ 236			
Soluable Salts (PPM)	ARIZ 237			
Unit Weight	T - 19		PCF	
Voids	T - 19		%	
Organic Imputities	T - 21			
Chloride Content (PPM)	ARIZ 736			
Sulfate Content (PPM)	ARIZ 733			
Exchangeable Sodium (%)	ARIZ 729			
Exchangeable Sodium (PPM)	ARIZ 729			

WHITE [X]
YELLOW [ ]
BLUE [ ]

11-16-14 — RECEIVED DATE
Joe Dogood 11-16-14 — TEST OPERATOR & DATE
Ted Headman 11-16-14 — SUPERVISOR & DATE

ADOT 44-9353 R11/14

SEE BACK ALSO

FIGURE 2

11.8 Determine and record "Elutriation" by subtracting the "Total Dry Weight" from the "Dry Wt. of Pass No. 4 Split", (533 - 491 = 42).

11.9 Perform fine sieving on the material left from elutriation using the No. 8 sieve down to the No. 200.

11.10 Record the weight of material in the appropriate “Weights Retained” box for each sieve.

11.11 Sum the individual weights retained for each sieve, compare to the weight of sample prior to sieving (fine sieve Total Dry Weight), and adjust or resieve as needed.

11.12 Determine the sieve analysis of the material as described in Section 10.

12. PROCEDURE WHEN SAMPLE IS NOT DRIED TO CONSTANT WEIGHT PRIOR TO SIEVING

12.1 The following is an outline and description of the procedure to be used when the sample is not dried to constant weight prior to sieving. An example of this procedure is shown in Figure 3.

12.2 Prepare sample, dry to free flowing condition, and record this weight as “Wet Sample Preweight”, (13010 in the example).

12.3 Perform coarse sieving.

12.4 Record the weight of the material in the appropriate "Weights Retained" box for each sieve, except record the weight of pass No. 4 material as the "Wet Wt. of - #4", (7365).

12.5 Sum the individual weights retained for each sieve, compare to weight of sample prior to sieving (Wet Sample Preweight), and adjust or resieve as needed.

12.6 The wet weight of pass No. 4 material is corrected for moisture using either a split of, or the entire amount of, the pass No. 4 material.

ARIZONA DEPARTMENT OF TRANSPORTATION
SOIL AND AGGREGATE TABULATION

USE CAPITAL LETTERS

LAB NUMBER	ORG NUMBER	MATL	TYPE	PUR-POSE	TEST LAB	SIZE	SIZE %
15-4444	9999	AB	2	A	P		

TEST NO.	LOT OR SUFFIX	SAMPLED BY	MO	DAY	YEAR	TIME
9		A. JONES	11	15	14	14:35 (MILITARY TIME)

SAMPLED FROM	LIFT NO.	RDWY	STATION
WINDROW			+ (IF MILEPOST, INPUT DECIMAL)

ORIGINAL SOURCE	PROJECT ENGINEER / SUPERVISOR	PROJECT NUMBER	TRACS NUMBER
CM # 3333	B. SMITH	F-099-9 (99)	H999901C

REMARKS

EXAMPLE FOR PROCEDURE WHEN SAMPLE IS NOT DRIED TO CONSTANT WEIGHT PRIOR TO SIEVING - (SECTION 12)

CONTACT PHONE NO. - (555)555-5555

ARIZ 201
☐ Dried to Constant Wt.
☐ Not Dried to Constant Wt.

ARIZ 248
☐ Alt. 1 ☐ Alt. 2 ☐ Alt. 3
☐ Alt. 4 ☐ Alt. 5

% OVERSIZE: +3" ___ +6" ___

COARSE FACTOR: 007765 = 100 / COARSE SIEVE TOTAL

WET SAMPLE PREWEIGHT = ___
WET WT. OF - #4 = ___
- #4 SPLIT WET WT. = ___

	WEIGHTS RETAINED	% RET.	% PASS	SPECS.	CUMULATIVE % RET. FINENESS MODULUS
3"					
2 1/2"					
2"					
1 1/2"	0		100	100	
1"	9 1 0	7	93	90-100	
3/4"	1 4 4 5	11	82		
1/2"	6 4 5	5	77		
3/8"	1 7 4 5	14	63		
1/4"	5 1 5	4	59		
#4	3 8 5	3			
- #4	7 2 3 4		56		
Total	1 2 8 7 9				

IF TOTAL SAMPLE IS WASHED:
UNWASHED WT. = ___
WASHED WT. = ___
ELUTRIATION = ___

DRY WT. OF - #4 SPLIT: 497
FINE FACTOR: 112676 = % PASS #4 / DRY WT. OF - #4 SPLIT

	WEIGHTS RETAINED	% RET.	% PASS	SPECS.	
#8	4 2	5	51	35-55	
#10	7 6	8	43		
#16	3 4	4	39		
#30	5 4	6	33		
#40	1 0 3	12	21		
#50	4 4	5	16		
#100	4 6	5	11		
#200	3 9	4			
-#200	2		6.6	0-8.0	
Total	4 9 1 (Dry Weight)				
Elutriation	5 7				

= #4 Split - Total Dry Weight

FINENESS MODULUS = TOTAL CUMULATIVE % RET. / 100

Liquid Limit (LL)	T - 89				T = AASHTO Tests
Plastic Limit (PL)	T - 90				SPECS.
Plasticity Index (PI) = LL - PL	T - 90				
Abrasion Method (A,B,C,D)	T - 96				
@ 100 Revolutions				%	%
@ 500 Revolutions				%	%
Absorption, H_2O	ARIZ 210 ARIZ 211			%	
Specific Gravity, SSD	ARIZ 210 ARIZ 211				
Specific Gravity, OD	ARIZ 210 ARIZ 211				
Specific Gravity, Apparent	ARIZ 210 ARIZ 211				
Proctor Method					A - ARIZ 225; C - ARIZ 226; D - ARIZ 226; AD - ARIZ 245; A1 - ARIZ 232; AD1 - ARIZ 246
Optimum Moisture				%	
Max. Dry Density				PCF	
Sand Equivalent	T - 176 ARIZ 242 (MAFC)				
At Least One Fractured Face	ARIZ 212			%	%
At Least Two Fractured Faces	ARIZ 212			%	%
Uncompacted Void Content	ARIZ 247			%	%
Moisture Content	T - 255 T - 265			%	
Flakiness Index	ARIZ 233			%	%
Carbonates	ARIZ 238			%	%
pH	ARIZ 236 OR 237				
Resistivity (ohm-cm)	ARIZ 236				
Soluable Salts (PPM)	ARIZ 237				
Unit Weight	T - 19			PCF	
Voids	T - 19			%	
Organic Imputities	T - 21				
Chloride Content (PPM)	ARIZ 736				
Sulfate Content (PPM)	ARIZ 733				
Exchangeable Sodium (%)	ARIZ 729				
Exchangeable Sodium (PPM)	ARIZ 729				

WHITE ☐
YELLOW ☐
BLUE ☐

RECEIVED DATE	TEST OPERATOR & DATE	SUPERVISOR & DATE
11-16-14	Joe Dogood 11-16-14	Ted Headman 11-16-14

ADOT 44-9353 R10/14

FIGURE 3

12.7 If a split of the pass No. 4 material is to be used to correct the weight of pass No. 4 material for moisture, immediately split the passing No. 4 material to at least 500 grams and record as the "- #4 Split Wet Wt.", (506). Dry the sample to constant weight, allow to cool, and record the weight as "Dry Wt. of Pass #4 Split", (497). If an elutriation and fine sieve analysis is to be performed, this split is used for that testing. Determine and record the "weight of pass No. 4 material" (7234) by the following:

$$\begin{matrix}\text{Weight of}\\ \text{Pass No. 4}\\ \text{Material}\end{matrix} = \begin{pmatrix}\text{Wet Wt.}\\ \text{of Pass}\\ \text{No. 4}\end{pmatrix} \text{x} \begin{pmatrix}\dfrac{\begin{matrix}\text{Dry Wt. of Pass}\\ \text{No. 4 Split}\end{matrix}}{\begin{matrix}\text{Pass No. 4 Split}\\ \text{Wet Wt.}\end{matrix}}\end{pmatrix}$$

12.8 If the entire amount of the pass No. 4 material is to be used to correct the weight of pass No. 4 material for moisture, the material is dried to constant weight and allowed to cool. The dry weight is recorded as the "weight of pass No. 4 material". If an elutriation and fine sieve analysis is to be performed on this maerial, the dry weight is also recorded as the "Dry Wt. of Pass No. 4 Split".

12.9 Determine and record the sample “Coarse Sieve Total”, (12879), by the following:

$$\begin{matrix}\text{Coarse}\\ \text{Sieve}\\ \text{Total}\end{matrix} = \begin{pmatrix}\text{Wet Sample}\\ \text{Preweight}\end{pmatrix} - \begin{pmatrix}\text{Wet Wt.}\\ \text{of Pass}\\ \text{No. 4}\end{pmatrix} - \begin{pmatrix}\text{Weight of}\\ \text{Pass No.}\\ \text{Material}\end{pmatrix}$$

12.10 If required, perform elutriation on the dry - #4 split, dry back to constant weight, allow to cool, and record as the "Total Dry Weight", (440).

12.11 Determine and record “Elutriation” by subtracting the “Total Dry Weight” from the “Dry Wt. of Pass No. 4 Split”, (497 - 440 = 57).

12.12 Perform fine sieving on the material left from elutriation using the No. 8 sieve down to the No. 200.

12.13 Record the weight of material in the appropriate “Weights Retained” box for each sieve.

12.14 Sum the individual weights retained for each sieve, compare to the weight of sample prior to sieving (fine sieve Total Dry Weight), and adjust or resieve as needed.

12.15 Determine the sieve analysis of the material as described in Section 10.

13. REPORT

13.1 The sieve analysis shall be reported either as shown in the example given in Figure 2 for a sample which has been dried to constant weight prior to sieving, or as shown in the example given in Figure 3 for a sample which has not been dried to constant weight prior to sieving.

13.2 A blank Soils and Aggregate Tabulation laboratory card is provided in Figure 4.

ARIZONA DEPARTMENT OF TRANSPORTATION
SOIL AND AGGREGATE TABULATION

USE CAPITAL LETTERS

LAB NUMBER | ORG NUMBER | MATL | TYPE | PUR-POSE | TEST LAB | SIZE | SIZE %

TEST NO. | LOT OR SUFFIX | SAMPLED BY | MO | DAY | YEAR | TIME (MILITARY TIME)

SAMPLED FROM | LIFT NO. | RDWY | STATION (IF MILEPOST, INPUT DECIMAL)

ORIGINAL SOURCE | PROJECT ENGINEER / SUPERVISOR | PROJECT NUMBER | TRACS NUMBER

REMARKS

CONTACT PHONE NO. - ( ) -

ARIZ 201
- ☐ Dried to Constant Wt.
- ☐ Not Dried to Constant Wt.

ARIZ 248
- ☐ Alt. 1 ☐ Alt. 2 ☐ Alt. 3
- ☐ Alt. 4 ☐ Alt. 5

% OVERSIZE: + 3 " | + 6 "

COARSE FACTOR = 100 / COARSE SIEVE TOTAL

WET SAMPLE PREWEIGHT =
WET WT. OF - # 4 =
- # 4 SPLIT WET WT. =

	WEIGHTS RETAINED	% RET.	% PASS	SPECS.	CUMULATIVE % RET. FINENESS MODULUS
3"					
2 1/2"					
2"					
1 1/2"					
1"					
3/4"					
1/2"					
3/8"					
1/4"					
# 4					
- # 4					
Total					

IF TOTAL SAMPLE IS WASHED:
UNWASHED WT. =
WASHED WT. =
ELUTRIATION =

DRY WT. OF - # 4 SPLIT | FINE FACTOR = % PASS # 4 / DRY WT. OF - # 4 SPLIT

	WEIGHTS RETAINED	% RET.	% PASS	SPECS.
#8				
#10				
#16				
#30				
#40				
#50				
#100				
#200				
-#200				
Total				
Elutriation				

Dry Weight = -#4 Split - Total Dry Weight

FINENESS MODULUS = TOTAL CUMULATIVE % RET. / 100

T = AASHTO Tests

			SPECS.
Liquid Limit (LL)	T - 89		
Plastic Limit (PL)	T - 90		
Plasticity Index (PI) = LL - PL	T - 90		
Abrasion Method (A,B,C,D)	T - 96		
@ 100 Revolutions		%	%
@ 500 Revolutions		%	%
Absorption, H_2O	ARIZ 210 ARIZ 211	%	
Specific Gravity, SSD	ARIZ 210 ARIZ 211		
Specific Gravity, OD	ARIZ 210 ARIZ 211		
Specific Gravity, Apparent	ARIZ 210 ARIZ 211		
Proctor Method			
Optimum Moisture		%	
Max. Dry Density		PCF	
Sand Equivalent	T - 176 ARIZ 242 (MAFC)		
At Least One Fractured Face	ARIZ 212	%	%
At Least Two Fractured Faces	ARIZ 212	%	%
Uncompacted Void Content	ARIZ 247	%	%
Moisture Content	T - 255 T - 265	%	
Flakiness Index	ARIZ 233	%	%
Carbonates	ARIZ 238	%	%
pH	ARIZ 236 OR 237		
Resistivity (ohm-cm)	ARIZ 236		
Soluble Salts (PPM)	ARIZ 237		
Unit Weight	T - 19	PCF	
Voids	T - 19	%	
Organic Imputities	T - 21		
Chloride Content (PPM)	ARIZ 736		
Sulfate Content (PPM)	ARIZ 733		
Exchangeable Sodium (%)	ARIZ 729		
Exchangeable Sodium (PPM)	ARIZ 729		

A - ARIZ 225
C - ARIZ 226
D - ARIZ 226
AD - ARIZ 245
A1 - ARIZ 232
AD1 - ARIZ 246

WHITE ☐
YELLOW ☐
BLUE ☐

RECEIVED DATE | TEST OPERATOR & DATE | SUPERVISOR & DATE

ADOT 44-9353 R11/14

SEE BACK ALSO

FIGURE 4

SPECIFIC GRAVITY AND ABSORPTION OF FINE AGGREGATE

(A Modification of AASHTO Designation T 84)

1. SCOPE

1.1 This method covers the determination of specific gravity and absorption of fine aggregate. The specific gravity may be expressed as bulk oven dry (O.D.) specific gravity, bulk saturated surface dry (SSD) specific gravity, or apparent specific gravity.

1.2 The specific gravity and absorption of fine aggregate is normally determined on pass No. 4 material. When the fine aggregate sample (pass No. 4) contains a substantial amount of passing No. 4 to retained No. 8 material, such as in mineral aggregate for asphaltic concrete friction course, the fine aggregate specific gravity and absorption shall be performed on pass No. 8 material. The fine aggregate specific gravity and absorption for mineral aggregates used in asphaltic concrete, other than asphaltic concrete friction course, shall be determined on pass No. 4 material. "Fine aggregate" as herein referenced will be either pass No. 4 or pass No. 8 material. Corresponding coarse aggregate specific gravity and absorption testing, utilizing the appropriate plus No. 4 or plus No. 8 material, shall be performed in accordance with Arizona Test Method 210.

1.3 This test method may involve hazardous material, operations, or equipment. This test method does not purport to address all of the safety concerns associated with its use. It is the responsibility of the user to consult and establish appropriate safety and health practices and determine the applicability of any regulatory limitations prior to use.

1.4 See Appendix A1 of the Materials Testing Manual for information regarding the procedure to be used for rounding numbers to the required degree of accuracy.

1.5 When the specific gravity and absorption of the fine aggregate and the coarse aggregate are known, the combined aggregate specific gravity and absorption is determined, if necessary, utilizing Arizona Test Method 251.

2. APPARATUS

2.1 Requirements for the frequency of equipment calibration and verification are found in Appendix A3 of the Materials Testing Manual.

2.2 Balance - A balance capable of measuring the maximum weight to be determined and conforming to the requirements of AASHTO M 231, except the readability and sensitivity of any balance utilized shall be at least 0.1 gram.

2.3 Pycnometer - A 500 mL volumetric flask into which the fine aggregate test sample can be readily introduced and in which the volume content can be reproduced within 0.2 mL. Figure 1 is an illustration of the type of flask that must be utilized. The volume of the flask filled to the mark shall be at least 50 percent greater than the space required to accommodate the test sample. If this requirement is not met for a particular aggregate, the normal sample size of 500 $\pm$ 10 grams may be reduced only enough to satisfy the requirement.

2.4 Mold - A metal mold in the form of a frustum of a cone with dimensions as follows: 40 $\pm$ 3 mm inside diameter at the top, 90 $\pm$ 3 mm inside diameter at the bottom, and 75 $\pm$ 3 mm in height, with the metal having a minimum thickness of 0.8 mm (See Figure 2).

2.5 Tamper - A metal tamper having a mass of 340 $\pm$ 15 grams, and having a flat circular tamping face 25 $\pm$ 3 mm in diameter (See Figure 2).

2.6 Oven - Capable of maintaining a temperature of 230 $\pm$ 9 °F.

3. SAMPLING

3.1 Sample the aggregate in accordance with Arizona Test Method 105.

4. PREPARATION OF TEST SAMPLE

4.1 Obtain a representative approximate 1200 gram test sample of the fine aggregate.

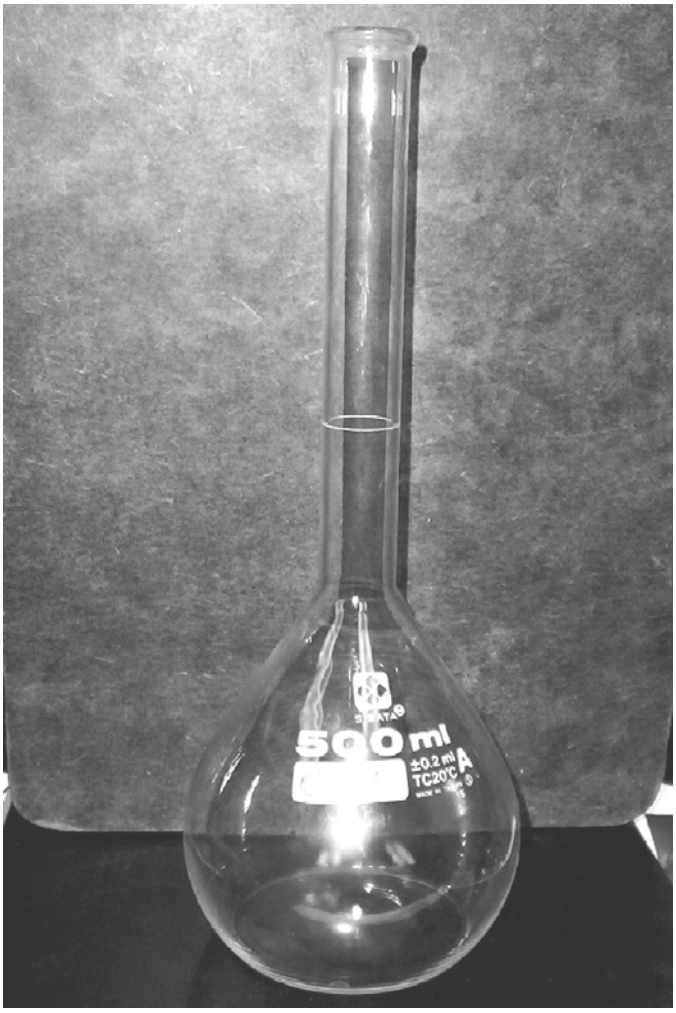

FIGURE 1

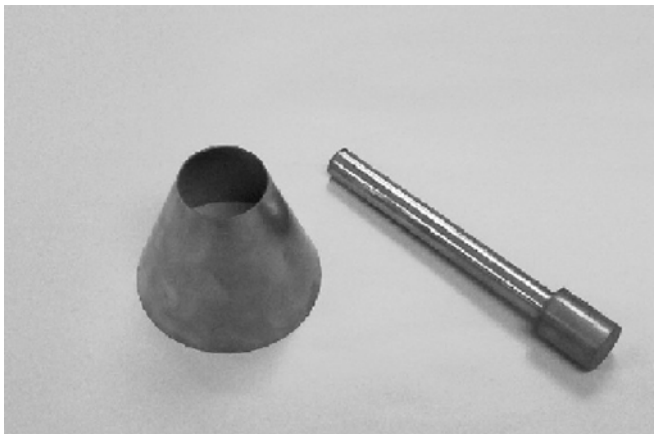

FIGURE 2

4.2 Dry the test sample in a suitable pan or vessel to constant mass [see Subsection 4.3 below] at a temperature of 230 ± 9 °F. (Constant mass shall be determined as follows: Dry the sample for a minimum of 1 hour at 230 ± 9 °F. Record the weight of the sample to the nearest 0.1 gram. Continue drying and weighing until the weight does not change more than 0.1 gram at drying intervals of a minimum of 30 minutes.) Allow the sample to cool to comfortable handling temperature, cover with sufficient water to completely immerse it throughout the soaking period, and permit to stand for 15 to 19 hours.

4.3 Where the absorption and specific gravity values are to be used in proportioning concrete mixtures in which the aggregates will be in their naturally moist condition, the requirement for initial drying to constant mass may be eliminated and, if the surfaces of the particles in the sample have been kept continuously wet until test, the 15 to 19 hour soaking may also be eliminated.

Note: Values for absorption and bulk (SSD) specific gravity may be significantly higher for aggregate not oven dried before soaking than for the same aggregate which has been dried and soaked as specified in Subsection 4.2.

4.4 Decant excess water with care to avoid loss of fines, spread the sample on a flat nonabsorbent surface exposed to a gently moving current of ambient or warm air, and stir frequently to secure homogeneous drying. Continue stirring and drying until the sample approaches a free-flowing condition. As the material begins to dry sufficiently, it may be necessary to work it with the hands in a rubbing motion to break up any conglomerations, lumps, or balls of material that develop.

4.5 Follow the procedure (cone test for surface moisture) given in Subsection 4.6 below to determine whether or not surface moisture is present on the fine aggregate particles. It is intended that the first trial will be made with some surface water in the sample. Continue drying with constant stirring, working the material with a hand-rubbing motion as necessary, and test at frequent intervals until the test indicates that the sample has reached a surface-dry condition. If the first trial of the surface moisture test indicates that moisture is not present on the surface, it has been dried past the saturated surface-dry condition. In this case, thoroughly mix a few milliliters of water with the fine aggregate and permit the specimen to stand in a covered container for 30 minutes. Then resume the process of drying and testing at frequent intervals for the onset of the surface-dry condition.

4.6 With one hand, hold the mold firmly on a smooth nonabsorbent surface with the large diameter down. The mold must be held firmly in place throughout the process of filling the mold, tamping, and removal of excess material from around the base of the mold. With the other hand, place a portion of the partially dried fine aggregate loosely in the mold, filling it until overflowing occurs, and heaping additional material above the top of the mold. Lightly tamp the fine aggregate into the mold with 25 light drops of the tamper. Each drop should start about 0.2 inch above the top surface of the fine aggregate. Permit the tamper to fall freely on each drop. Adjust the starting height to the new surface elevation after each drop and distribute the drops over the surface. Remove loose material from around the base of the mold, and lift the mold vertically. If surface moisture is still present, the fine aggregate will retain the molded shape. When the fine aggregate slumps slightly, it indicates that it has reached a surface-dry condition. Some angular fine aggregate or material with a high proportion of fines may not slump in the cone test upon reaching a surface-dry condition. This may be the case if fines become airborne upon dropping a handful of the sand from the cone test 4 to 6 inches onto a surface. For these materials, the saturated surface-dry condition should be considered as the point that one side of the fine aggregate slumps slightly upon removing the mold.

5. PROCEDURE

5.1 The pycnometer which is to be used shall be calibrated prior to performing the test. The mass of the pycnometer filled to its calibration capacity with water at 73.4 ± 3.1 °F is determined and recorded to the nearest 0.1 gram. Prior to determining the mass of pycnometer filled with water to the calibration mark, the inside of neck of pycnometer just above calibration level shall be dried with a rolled up paper towel.

5.2 Obtain a representative 500 ± 10 gram sample of the saturated surface-dry fine aggregate prepared as described in Section 4. Immediately determine and record the weight of the sample to the nearest 0.1 gram.

5.3 Partially fill the calibrated pycnometer with water. Introduce the sample into the pycnometer and fill with additional water to approximately 90 percent of total capacity. Roll and agitate the pycnometer to eliminate all air bubbles.

Note: Adding a few drops of 99% grade isopropyl alcohol (ASTM D 770), after removal of air bubbles and just prior to bringing the water level to its calibrated capacity, has been found useful in dispersing foam on the water surface.

5.4 Rinse the inside of neck of pycnometer with water and add sufficient water to bring the water level in the pycnometer to its calibrated capacity. Adjust its temperature to 73.4 ± 3.1 °F, if necessary by immersion in circulating water. With a rolled up paper towel, dry the inside neck of pycnometer just above the calibration level. Determine and record the mass of the pycnometer, sample, and water to the nearest 0.1 gram.

5.5. Remove the fine aggregate from the pycnometer and dry to constant mass at a temperature of 230 ± 9 °F. (Constant mass shall be determined as follows: Dry the sample for a minimum of 1 hour at 230 ± 9 °F. Record the weight of the sample to the nearest 0.1 gram. Continue drying and weighing until the weight does not change more than 0.1 gram at drying intervals of a minimum of 30 minutes.) Cool in air at room temperature for 1.0 ± 0.5 hours. Determine and record the mass to the nearest 0.1 gram.

Note: In lieu of drying and weighing the sample which has been removed from the pycnometer, a second portion of the saturated surface dry sample may be used to determine the oven dry weight. This sample must be obtained at the same time and shall weigh within ± 0.2 grams of the sample which is introduced into the pycnometer.

6. CALCULATIONS

6.1 Calculate the bulk (O.D.) specific gravity as shown below:

$$\text{Bulk (O.D.) Specific Gravity} = \frac{A}{(B + S - C)}$$

Where:
- A = mass of oven-dry test sample in air.
- B = mass of pycnometer filled with water to calibration mark.
- S = mass of saturated surface-dry test sample.
- C = mass of pycnometer with test sample and water to calibration mark.

6.2 Calculate the bulk (SSD) specific gravity as shown below:

$$\text{Bulk (SSD) Specific Gravity} = \frac{S}{(B + S - C)}$$

6.3 Calculate the apparent specific gravity as shown below:

$$\text{Apparent Specific Gravity} = \frac{A}{(B + A - C)}$$

6.4 Calculate the percent absorption as shown below:

$$\text{Percent Absorption} = \frac{(S - A)}{A} \times 100$$

7. REPORT

7.1 Report specific gravity results to the nearest 0.001, and indicate the type of specific gravity, whether bulk (O.D.), bulk (SSD), or apparent.

7.2 Report the absorption result to the nearest 0.01%.

7.3 If the specific gravity and absorption values were determined without first drying the aggregate, as permitted in Subsection 4.3, it shall be noted in the report. The source of the sample and the procedures used to prevent drying prior to testing shall also be reported.

7.4 The size of the material tested shall be noted, i.e., minus No. 4 or minus No. 8.

8. PROCEDURE FOR DETERMINING COMBINED SPECIFIC GRAVITIES AND ABSORPTION FOR DIFFERENT SOURCES OF MATERIAL

8.1 Two methods are given below for determining the combined specific gravities and absorption for different sources of material, as described in Subsections 8.2 and 8.3.

8.2 The specific gravity and absorption may be determined for fine aggregates from different sources which have been composited in the desired proportions and thoroughly blended.

8.3 The specific gravity and absorption of the fine aggregate from each individual source may be determined and the combined specific gravity and absorption calculated as described in Subsections 8.3.1 through 8.3.4 below. [Refer to the example given in Subsection 8.4 for an illustration of the procedure and calculations.] The same size of material, either pass No. 4 or pass No. 8, shall be used to determine the individual specific gravities and absorption for each of the different sources.

8.3.1 For each individual material in the composite, its contribution to the total percent of fine aggregate in the composite is determined and recorded to the nearest 0.01% as "IP":

$$IP = \frac{\begin{bmatrix} \text{Percent of} \\ \text{Individual Material} \\ \text{in Composite} \end{bmatrix} \times \begin{bmatrix} \text{Percent of Fine} \\ \text{Aggregate in} \\ \text{Individual Material} \end{bmatrix}}{100}$$

Where: IP = Contribution by each individual material to the total percent of fine aggregate in the composite.

8.3.2 For each individual source, the percent of fine aggregate in the composite is determined by summing the values for "IP" for that source, and recording the total as "P".

8.3.3 The combined specific gravity is calculated by the following:

$$G = \frac{P1 + P2 + \ldots + Pn}{\frac{P1}{G1} + \frac{P2}{G2} + \ldots + \frac{Pn}{Gn}}$$

Where: P1, P2, ... Pn = For each individual source, the percent of fine aggregate in the composite, "P".

G1, G2, ... Gn = The fine specific gravity for each individual source.

8.3.4 The combined absorption is calculated by the following:

$$\text{Combined Absorption} = \frac{\begin{bmatrix}\text{Combined Bulk}\\ \text{(SSD) Specific}\\ \text{Gravity}\end{bmatrix} - \begin{bmatrix}\text{Combined}\\ \text{Bulk (O.D.) Specific}\\ \text{Gravity}\end{bmatrix}}{\begin{bmatrix}\text{Combined Bulk (O.D.)}\\ \text{Specific Gravity}\end{bmatrix}}$$

8.4 The following is an example of the procedure and calculations described in Subsections 8.3.1 through 8.3.4 above. The example given is for a composite consisting of 26% coarse aggregate, 12% intermediate aggregate, and 47% fine aggregate from the primary source; with 15% aggregate from a secondary source. The coarse aggregate has 2% pass the No. 4 sieve, the intermediate aggregate has 6% pass the No. 4 sieve, the fine aggregate has 91% pass the No. 4 sieve, and the aggregate from the secondary source has 76% pass the No. 4 sieve.

Fine aggregate specific gravity and absorption for each of the different sources:

Primary Source (Coarse, Intermediate, Fine):

Bulk (O.D.) Specific Gravity = 2.576
Bulk (SSD) Specific Gravity = 2.611
Apparent Specific Gravity = 2.669
Absorption = 1.36%

Secondary Source:

Bulk (O.D.) Specific Gravity = 2.641
Bulk (SSD) Specific Gravity = 2.686
Apparent Specific Gravity = 2.764
Absorption = 1.70%

Determination of "IP" for individual materials, and "P" for individual sources:

<u>Primary Source (Coarse, Intermediate, Fine):</u>

$$\text{"IP" Coarse} = \frac{(26)\,x\,(2)}{100} = 0.52\%$$

$$\text{"IP" Intermediate} = \frac{(12)\,x\,(6)}{100} = 0.72\%$$

$$\text{"IP" Fine} = \frac{(47)\,x\,(91)}{100} = 42.77\%$$

"P" for the Primary Source = IP (Coarse) + IP (Intermediate) + IP (Fine)

= (0.52%) + (0.72%) + (42.77%) = 44.01%

<u>Secondary Source:</u>

$$\text{"IP" (Secondary Source)} = \frac{(15)\,x\,(76)}{100} = 11.40\%$$

"P" for Secondary Source = IP (Secondary Source) = 11.40%

Total fine aggregate in the composite = P(Primary Source) + P(Secondary Source)

= (44.01%) + (11.40%) = 55.41%

$$\begin{bmatrix}\text{Combined}\\ \text{Bulk (O.D.)}\\ \text{Specific}\\ \text{Gravity}\end{bmatrix} = \frac{55.41}{\frac{44.01}{2.576}+\frac{11.40}{2.641}} = 2.589$$

$$\begin{bmatrix}\text{Combined}\\ \text{Bulk (SSD)}\\ \text{Specific}\\ \text{Gravity}\end{bmatrix} = \frac{55.41}{\frac{44.01}{2.611}+\frac{11.40}{2.686}} = 2.626$$

$$\begin{bmatrix}\text{Combined}\\ \text{Apparent}\\ \text{Specific}\\ \text{Gravity}\end{bmatrix} = \frac{55.41}{\frac{44.01}{2.669}+\frac{11.40}{2.764}} = 2.688$$

$$\begin{bmatrix}\text{Combined}\\ \text{Absorption}\end{bmatrix} = \frac{2.626-2.589}{2.589} \text{ x } 100 = 1.43\%$$

EXAMPLE OF CALCULATIONS FOR FINE SPECIFIC GRAVITY

Bulk Sp. Gr. (O.D. basis) $= \frac{A}{B + S - C}$ $\frac{(\ 499.9\ )}{(\ 683.7\ ) + (\ 503.3\ ) - (\ 990.1\ )}$ = ***2.539*** *2.538852*

Where: **A =** mass of oven-dry sample in air, g. **499.9**
B = mass of pycnometer filled with water, g. **683.7**
C = mass of pycnometer with sample and water to calibration mark, g. **990.1**
S = mass of saturated-surface-dry sample, g. **503.3**

Bulk Sp. Gr. (SSD basis) = $= \frac{S}{B + S - C}$ $\frac{(\ 503.3\ )}{(\ 683.7\ ) + (\ 503.3\ ) - (\ 990.1\ )}$ = ***2.556*** *2.556120*

Apparent Sp. ($= \frac{A}{B + A - C}$ $\frac{(\ 499.9\ )}{(\ 683.7\ ) + (\ 499.9\ ) - (\ 990.1\ )}$ = ***2.583*** *2.583463*

Absorption, percent $= \frac{S - A}{A} \times 100$ $\frac{(\ 503.3\ ) - (\ 499.9\ )}{(\ 499.9\ )}$ x 100 = ***0.68*** % *0.680136*

FIGURE 3

MAXIMUM DRY DENSITY AND OPTIMUM MOISTURE OF SOILS BY PROCTOR METHOD A

(A Modification of AASHTO Designation T 99)

1. SCOPE

1.1 This test method describes the procedure for determining the maximum dry density and optimum moisture content for a soil by the Method A Proctor Method. Some materials may be more appropriately tested by Arizona Test Method 245, "Maximum Dry Density and Optimum Moisture of Soils by Alternate Method D Proctor".

1.2 Method A may be used for all maximum dry density and optimum moisture content determinations except for volcanic cinders or light porous material on which the specific gravity cannot be determined with consistency or when the moisture absorption for the coarse aggregate is greater than 4.0%.

1.3 Method A may be used except when greater than 50% (60% for Aggregate Base) of the material is retained on the No. 4 sieve.

1.4 An example is provided in Figure 2 for the calculations and determinations referenced herein.

1.5 This test method may involve hazardous materials, operations, and equipment. This test method does not purport to address all of the safety problems associated with its use. It is the responsibility of whomever uses this test method to consult and establish appropriate safety and health practices and determine the applicability of regulatory limitations prior to use.

1.6 See Appendix A1 of the Materials Testing Manual for information regarding the procedure to be used for rounding numbers to the required degree of accuracy.

2. APPARATUS

2.1 Requirements for the frequency of equipment calibration and verification are found in Appendix A3 of the Materials Testing Manual.

2.2 4 inch proctor mold having a capacity of approximately 1/30 cubic foot, with an internal diameter of 4.000 plus 0.024 or minus 0.016 inches and a height of 4.584 plus 0.005 or minus 0.008 inches. The mold shall have a nominal wall thickness of 1/4 inch. It shall be equipped with an extension collar approximately 2-3/8 inches high. A baseplate as shown in Figure 1 shall be provided.

2.3 A hand or mechanical rammer weighing 5.50 $\pm$ 0.02 pounds, having a flat face, and equipped with a suitable arrangement to control the height of drop to a free fall of 12 $\pm$ 0.06 (1/16) inches above the elevation of the soil. The rammer face shall be circular with a diameter of 2.000 plus 0.010 or minus 0.015 inches. If a mechanical apparatus is used, it must be monitored through the ADOT proficiency sample program and maintain a rating of 3 or better based on the results of testing ADOT and AMRL proficiciency samples.

2.4 Hardened-steel straightedge, at least 10 inches in length. It shall have one beveled edge, and at least one longitudinal surface (used for final trimming) shall be plane within 0.01 inch per 10 inches (0.1 percent) of length with the portion used for trimming the soil.

2.5 Scale or balance capable of measuring the maximum weight to be determined, accurate to at least one gram.

2.6 Scale or balance capable of measuring the maximum weight to be determined, accurate to at least 0.1 gram.

2.7 Oven capable of maintaining a temperature of 230 $\pm$ 9 °F.

2.8 No. 4 and 3 inch sieves conforming to the requirements of AASHTO M 92.

2.9 Miscellaneous mixing tools and pans.

2.10 Sample Extruder (optional) consisting of a jack, lever, frame, or other device for extruding the compacted sample from the mold.

3. CALIBRATION OF MOLD

3.1 Molds shall be calibrated in accordance with APPENDIX A of this procedure.

4. SAMPLE

4.1 Enough soil material shall be provided from the field to make five compacted specimens. A minimum sample size of 20,000 grams (approximately 45 lbs.) is normally required.

4.2 If the soil sample is damp when received from the field, dry it until it becomes friable under a trowel. Drying may be in air or by use of a slow fan or other drying apparatus such that the temperature of the sample does not exceed 140 °F.

4.3 Thoroughly break up the aggregations in such a manner as to avoid reducing the natural size of individual particles.

4.4 Weigh out an approximate 20,000 gram sample of representative soil. Record the weight of the sample, and sieve the material over a No. 4 sieve. If the percentage of coarse aggregate or rock retained on the No. 4 sieve is not already known from gradation testing, save any material retained on the No. 4 sieve and weigh. Calculate the percent of coarse aggregate or rock particles retained on the No. 4 sieve according to the following equation:

$$PR4 = \frac{WR4}{WT} \times 100$$

Where:
PR4 = Percentage of coarse aggregate or rock particles retained on the No. 4 sieve
WR4 = Weight of coarse aggregate or rock particles retained on the No. 4 sieve
WT = Total weight of material sieved

4.5 If "PR4" is greater than 50% (60% for Aggregate Base), Alternate Method D, Arizona Test Method 245, shall be used to determine the maximum dry density. If "PR4" is less than or equal to 50% (60% for Aggregate Base), blend material passing the No. 4 sieve thoroughly and proceed to Section 5 of this test method. If a specific gravity and absorption determination, in accordance with AASHTO T 85, is to be made for the plus No. 4 material, save an adequate amount of this material, otherwise, discard it.

5. PROCEDURE

5.1 From the thoroughly blended passing No. 4 material from Subsection 4.5, split out 5 representative approximate 2500 gram samples.

5.2 Select one sample and thoroughly mix with sufficient water to dampen it to approximately three percentage points below optimum moisture content.

Note: If desired, an additional three samples may be mixed at this time with approximate moisture contents of 1% below optimum, 1% over optimum, and 3% over optimum. The moisture in each of these samples shall be retained by covering with a damp cloth or being sealed in air tight containers until they are compacted. One of the five samples should be retained for future use since it is necessary to have at least two points defined on each side of the moisture-density curve.

5.3 Heavy clay soils or materials which tend to break down, or those in which it is difficult to incorporate water, shall require approximately 12 hours for uniform moisture absorption to be achieved. This shall be accomplished by preparing separate samples for each increment of water to be added, and then placing and sealing these samples in air tight containers for the 12-hour period.

5.4 Form a specimen by compacting the prepared soil in the four inch mold (with extension collar attached) in three equal layers to give a total compacted depth of about 5 inches. Compact each layer with 25 uniformly distributed blows from the rammer, dropping free from a height of 12 inches. While each layer is being compacted, the remainder of material shall be in a pan covered by a damp cloth. During compaction, the mold shall rest firmly on a dense, uniform, rigid and stable foundation.

Note: Each of the following has been found to be a satisfactory base on which to rest the mold during compaction of the soil: A block of concrete, weighing not less than 200 lbs., supported by a stable foundation; a sound concrete floor; and for field application, such surfaces as found in concrete box culverts, bridges, and pavements.

5.5 When compacting granular, free-draining materials, at moisture contents which are at or above optimum, the mold shall be prepared by first sealing the bottom of the mold with waterproofing grease. All excess grease shall be wiped from the mold and baseplate.

5.6 Following compaction, carefully remove the extension collar. It may be necessary to use a follower to retain the soil in the mold while removing the collar to prevent damage or disturbance of the soil below the top of the mold. Carefully trim the compacted soil even with the top of the mold by means of the straightedge. If any voids are created during trimming, these shall be filled with fine material and smoothed off. Determine the weight of compacted specimen and mold. Determine the wet density, "WD", of the compacted soil by the following:

$$WD = \frac{M1 - M2}{VM \times 453.6 \text{ (grams/lb.)}}$$

Where:
- WD = Wet density of compacted soil, lb./cu. ft.
- M1 = Weight of compacted specimen and mold, grams
- M2 = Weight of the mold, grams
- VM = Volume of the mold, cu. ft. (See Section 3 of this procedure.)

5.7 The estimated dry density, "ED", of the compacted soil may be calculated and recorded to the nearest 0.1 lb./cu. ft. as follows:

$$ED = \frac{WD}{\text{(Approx. \% of water added)} + 100} \times 100$$

Where:
- ED = Estimated dry density of compacted soil, lb./cu. ft.
- WD = Wet density of compacted soil, lb./cu. ft.

Note: These estimated densities are approximate only and will be corrected when final moisture results are obtained.

5.8 The estimated dry density is useful in deciding how much water to add in later trial batches, if the procedure described in the note following Subsection 5.2, for initially preparing three additional samples with varing moisture contents is not utilized. By carefully observing the estimated dry density of the compacted samples, the operator should be able to vary the moisture content as the test proceeds so that when the final moisture-density results are plotted, a curve will result that rises to a peak and then falls away.

5.9 Remove the material from the mold and slice vertically through the center. Take a representative minimum 300 gram sample from the full length and width of one of the cut faces. Weigh immediately, and dry to a constant weight in an oven at 230 ± 9 °F to determine the moisture content in accordance with AASHTO T 265. Record the weight of wet soil to the nearest 0.1 gram as "WW", and record the weight of oven dry soil to the nearest 0.1 gram as "DW".

5.10 For granular, free-draining materials, the moisture content shall be determined using the entire compacted proctor specimen. Determine the weight of wet soil, "WW", by subtracting the weight of the mold, "M2", from the weight of compacted specimen and mold, "M1". Record the weight of wet soil, "WW", and the weight of oven dry soil, "DW", to at least the nearest gram. All clinging material shall be removed from the inside of the mold and included with the specimen. To facilitate drying, the specimen may be broken up and spread out in a large pan, being careful to not lose any soil particles.

5.11 Select another of the samples which was split in Subsection 5.1, and if not already done, thoroughly mix with water in sufficient amount to increase the moisture content by approximately two percentage points.

5.12 Repeat the procedure in Subsections 5.2 through 5.9 for the sample at each moisture content, as necessary to establish a moisture-density curve which rises to a peak and then falls away.

6. CALCULATIONS

6.1 Calculate percent moisture and record to the nearest 0.1 percent by the following:

$$\% \text{ Moisture} = \frac{WW - DW}{DW} \times 100$$

Where: WW = weight of wet soil, grams
DW = weight of oven dry soil, grams

6.2 Calculate dry density and record to the nearest 0.1 lb./cu. ft. by the following:

$$DD = \frac{WD}{\% \text{ Moisture} + 100} \times 100$$

Where: DD = Dry density of compacted soil, lb./cu. ft.
WD = Wet density of compacted soil, lb./cu. ft.

7. MOISTURE-DENSITY RELATIONSHIP

7.1 The percent moisture and corresponding dry density for each of the compacted soil specimens shall be plotted on the graph provided on the proctor density test form shown in Figure 2. For a good plot, the majority of the graph is utilized. Normally, three increments on the horizontal axis shall equal one percent of moisture, and three increments on the vertical axis shall equal one lb./cu. ft. of dry density. If another number of increments other than three is utilized, the number of increments for one percent moisture and one lb./cu. ft. dry density shall always be the same.

7.2 On each side of the maximum density curve, at least two points should be utilized to form two straight lines. The intersection point of these two lines defines the peak point of the density-moisture content relationship, or the maximum density and optimium moisture content for the soil. In general it will be found that higher unit mass soils assume steeper slopes with high maximum dry densities at low optimum moisture contents, while the lower unit mass soils assume flatter, more gently sloped lines with high optimum moisture contents and low maximum dry densities. Figure 4 gives examples of moisture-density plots which show the different slopes associated with different maximum dry density ranges.

7.3 Optimum moisture content - The percent moisture content corresponding to the peak (intersection point of the two lines) of the moisture-density curve shall be termed the "optimum moisture content", and shall be reported as "OM" to the nearest 0.1 percent.

7.4 Maximum dry density - The dry density at optimum moisture content corresponding to the peak (intersection point of the two lines) of the moisture-density curve shall be termed the "maximum dry density", and shall be reported as "MD" to the nearest 0.1 lb./cu. ft.

Note: The optimum moisture and maximum dry density determinations above are for the material passing the No. 4 sieve. When testing field samples for comparison to proctor optimum moisture and maximum dry density, a correction to the proctor optimum moisture and maximum dry density must be made, in accordance with ARIZ 227, for the percent rock which the field sample contains.

8. REPORT

8.1 Record the moisture and density data on the laboratory test form along with the laboratory number, material source and type, and other information required. A blank laboratory test form is provided in Figure 3.

APPENDIX A

CALIBRATION OF PROCTOR MOLDS

1. CALIBRATION

1.1 Molds shall be calibrated at least once a year, or sooner if there is reason to question the accuracy of the calibration.

1.2 Lightly coat the bottom of the mold with a waterproofing grease. (Dow Corning High Vacuum Grease, or similar, has proven satisfactory for this application.) For split molds, waterproofing grease is also necessary on the edges of the split mold halves which join together.

1.3 Fit mold into baseplate and secure snugly into place.

1.4 Wipe excess grease from the mold and the baseplate.

1.5 Record weight of baseplate, empty mold, and glass plate to at least the nearest 0.1 gram.

Note: An example which illustrates the recording of calibration data and calculations is shown in Figure 5. Figure 6 is a blank calibration form.

1.6 With the mold and baseplate assembly on a flat and level surface fill the mold with distilled water at room temperature 77 $\pm$ 9 °F.

1.7 Determine and record the temperature of the water to the nearest one degree Fahrenheit, or to the nearest tenth of a degree Celsius.

1.8 With a small rod, remove any air bubbles that may be clinging to the sides or bottom of the mold. Add additional water to completely fill the mold, using a glass plate in such a way to ensure accurate filling of the mold, eliminating air bubbles and excess water. Check bottom of mold to assure there is no leakage.

1.9 Dry the base plate, glass and outside of mold with a dry, absorbent cloth. Care must be taken to not lose water from inside of mold during drying. Record weight of baseplate, mold filled with water, and glass plate to at least the nearest 0.1 gram.

APPENDIX A - (Continued)

1.10 Determine the weight of water to fill mold by subtracting the weight of baseplate, empty mold, and glass plate from the weight of the baseplate, mold filled with water, and glass plate.

1.11 For the temperature of the water, determine its corresponding unit weight from the table below.

Temperature	**Unit Weight of Water**
Temp °F	**lbs/cu. Ft.**
68	62.315
69	62.308
70	62.301
71	62.293
72	62.285
73	62.277
74	62.269
75	62.261
76	62.252
77	62.243
78	62.234
79	62.225
80	62.216
81	62.206
82	62.196
83	62.186
84	62.176
85	62.166
86	62.155

1.12 Calculate the volume of the mold, in cu. ft., as shown on the calibration form in Figures 5 and 6, and record to the nearest four decimal places.

1.13 Thoroughly clean grease from the mold and base plate. On the mold, record the identification of the mold, the date of calibration, and the volume of the mold.

1.14 Documentation of the calibration data shall be kept on file.

2. REQUIRED DOCUMENTATION

2.1 Record of weights, temperatures, and calculations required in the calibration procedure.

2.2 Identification of mold.

2.3 Date of calibration.

2.4 Volume of the mold.

2.5 Operator performing calibration.

2.6 Supervisor check of calibration data.

2.7 Date of calibration expiration.

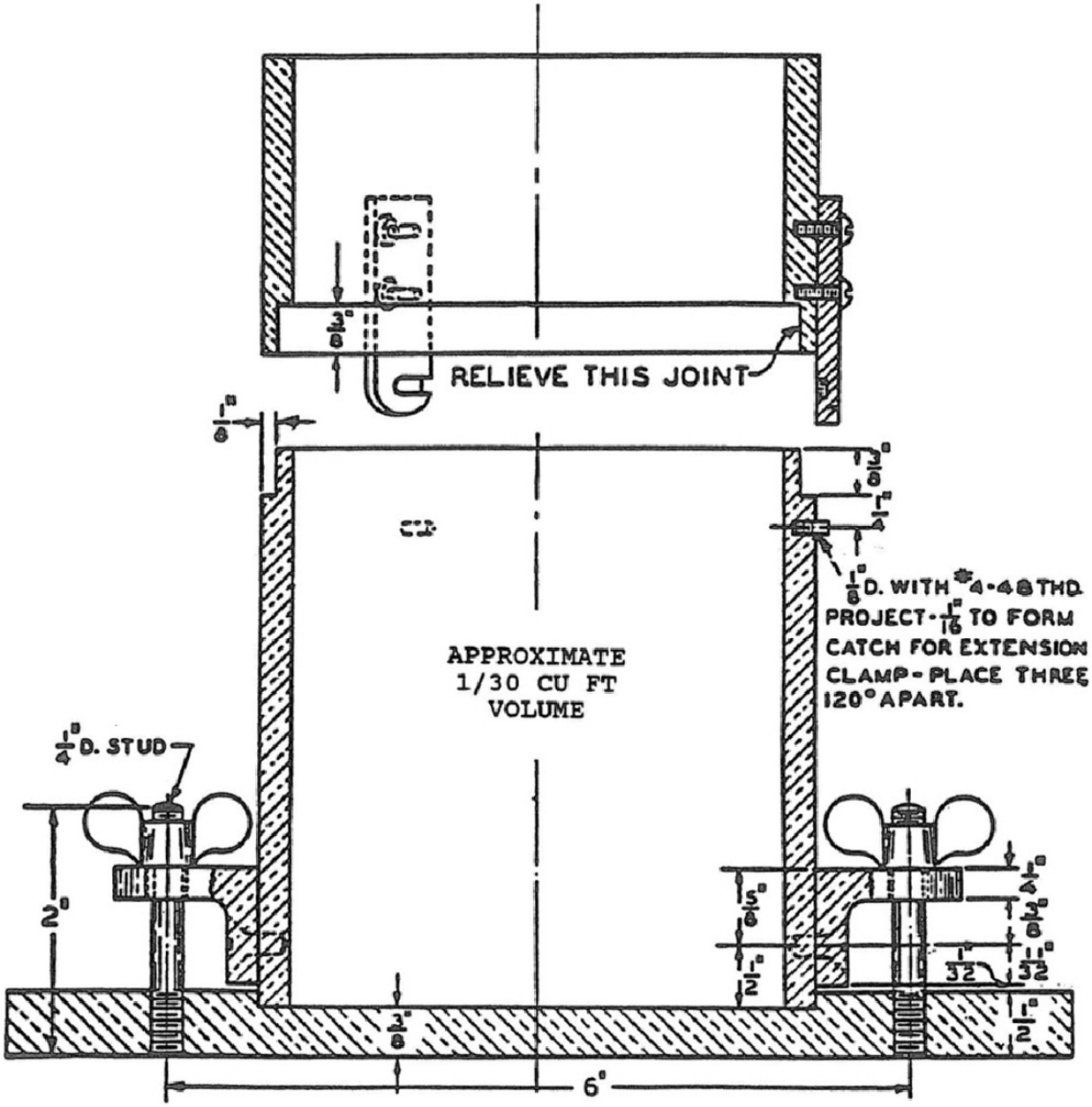

CYLINDRICAL MOLD, COLLAR,
AND BASEPLATE
(4 INCH MOLD)

FIGURE 1

Arizona Department of Transportation
METHOD A or **ALTERNATE METHOD D** PROCTOR DENSITY
(Arizona Test Method 225 or 245)

TRACS No: H999901C Lab No : Rec'd Date: 08/15/2015
Source and Type of Material :
Proctor Method Used : **Method A** ✓ or **Alternate Method D**
Test Operator and Date : Supervisor and Date:

Weight of Mold = **M2** = 1970 grams | Volume of Mold = **VM** = 0.0336 cu. ft. | **a** = VM x 453.6 = 15.2410 g/cu ft

b	M1	c	WD	ED	Moisture Determination WW	DW	d	e	DD
Approx % of water Added	Wt. of Sample and Mold	Wet Wt. of Sample M1 - M2	Wet Density lb/ cu ft c/a	Est. Dry Density WD x 100 / b + 100	Wet Wt. of Moisture Sample	Dry Wt. of Moisture Sample	Wt. of Water WW - DW	Percent Moisture d x 100 / DW	Dry Density lb/cu ft WD x 100 / e + 100
11	3884	1914	125.6	113.2	354.6	318.9	35.7	11.2	112.9
13	3955	1985	130.2	115.2	320.1	283.8	36.3	12.8	115.4
15	3995	2025	132.9	115.6	410.6	356.7	53.9	15.1	115.5
17	3986	2016	132.3	113.1	344.6	293.8	50.8	17.3	112.8

METHOD A
WT = 21556 WR4 = 4462
PR4 = WR4 / WT x 100 = 21 %

ALTERNATE METHOD D
WT = WR 3/4 =
PR 3/4 = WR 3/4 / WT x 100 = %

Coarse Aggregate Bulk Oven Dry Specific Gravity : 2.476

Coarse Aggregate Absorption : 1.83

OPTIMUM MOISTURE CONTENT = OM = 13.9

MAXIMUM DRY DENSITY (lb. / cu. ft.) = MD = 117.1

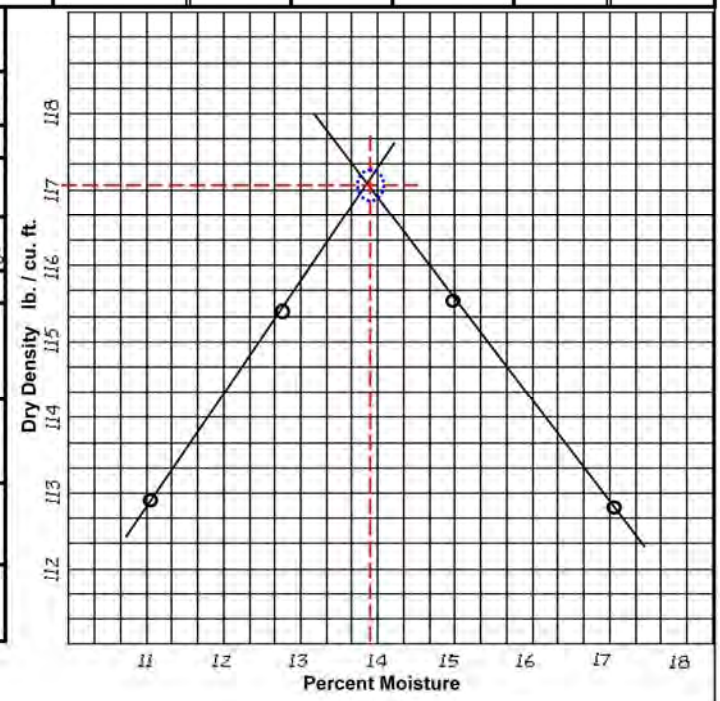

Remarks :

FIGURE 2

Arizona Department of Transportation
METHOD A or **ALTERNATE METHOD D** PROCTOR DENSITY
(Arizona Test Method 225 or 245)

Project No: _____ Lab No : _____ Rec'd Date: _____
Source and Type of Material : _____
Proctor Method Used : **Method A** _____ or **Alternate Method D** _____
Test Operator and Date : _____ Supervisor and Date: _____

Weight of Mold = **M2** = _____ grams | Volume of Mold = **VM** = _____ cu. ft. | a = VM x 453.6 = _____

b	M1	c	WD	ED	Moisture Determination				DD
					WW	DW	d	e	
Approx % of water Added	Wt. of Sample and Mold	Wet Wt. of Sample **M1 - M2**	Wet Density lb/ cu ft $\frac{c}{a}$	Est. Dry Density $\frac{WD \times 100}{b + 100}$	Wet Wt. of Moisture Sample	Dry Wt. of Moisture Sample	Wt. of Water **WW - DW**	Percent Moisture $\frac{d \times 100}{DW}$	Dry Density lb/cu ft $\frac{WD \times 100}{e + 100}$

METHOD A

WT = _____ WR4 = _____

PR4 = $\frac{WR4}{WT}$ x 100 = _____

ALTERNATE METHOD D

WT = _____ WR 3/4 = _____

PR 3/4 = $\frac{WR\ 3/4}{WT}$ x 100 = _____ %

Coarse Aggregate Bulk Oven Dry Specific Gravity : _____

Coarse Aggregate Absorption : _____

OPTIMUM MOISTURE CONTENT = OM = _____

MAXIMUM DRY DENSITY (lb. / cu. ft.) = MD = _____

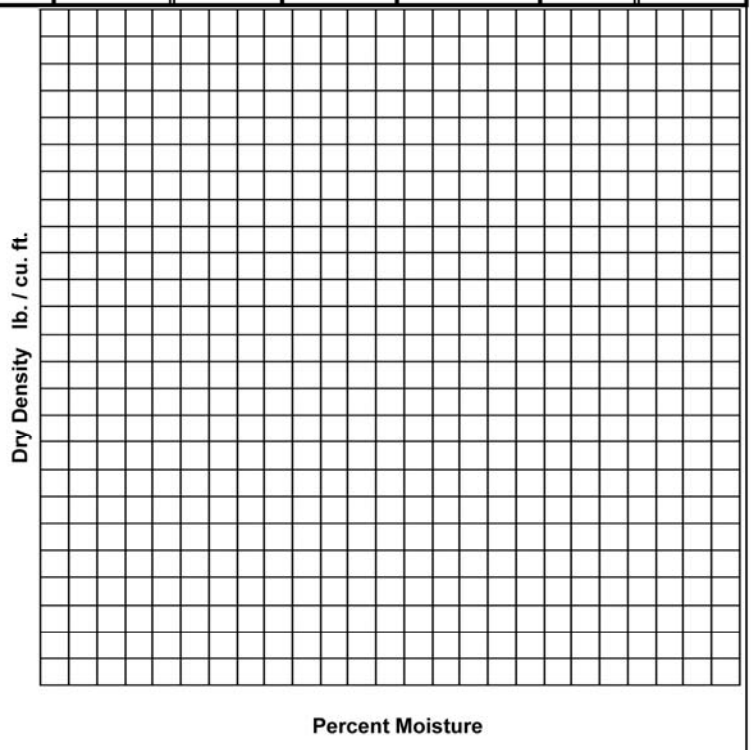

Remarks : _____

FIGURE 3

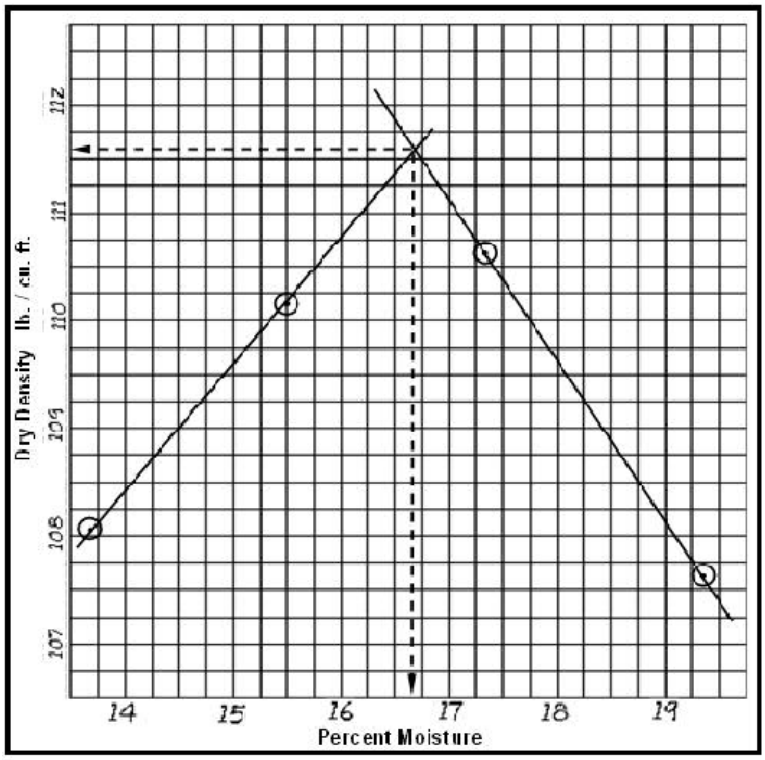

CLAYEY SAND

% Moisture	Dry Density
13.7	108.1
15.5	110.2
17.3	110.6
19.4	107.6

Maximum Density = 111.6 lb/cu ft
Optimum Moisture = 16.7%

FINE CLAY

% Moisture	Dry Density
21.2	94.5
22.3	95.8
25.2	95.1
27.8	93.1

Maximum Density = 96.7 lb/cu ft
Optimum Moisture = 23.1%

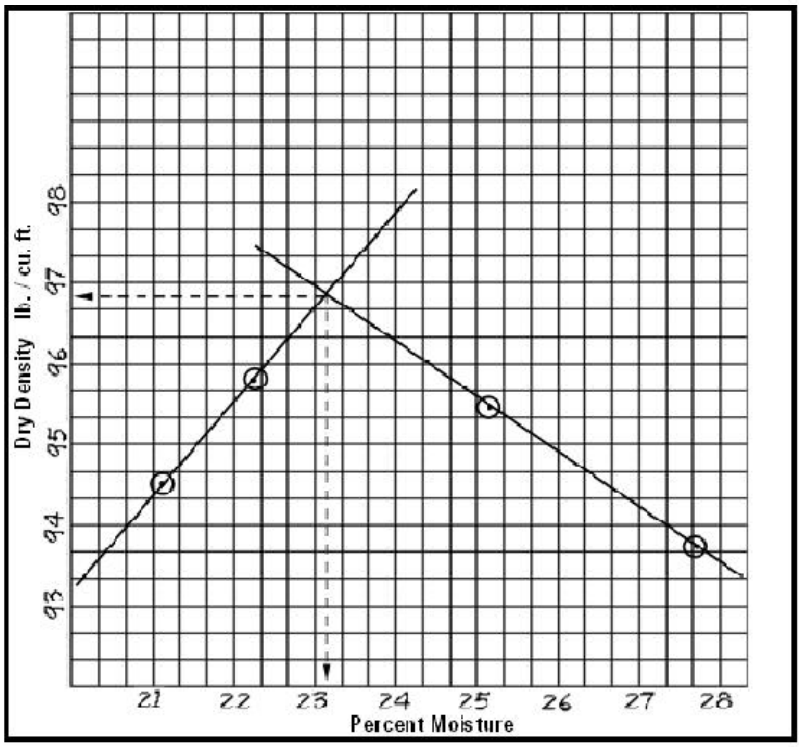

FIGURE 4

ARIZONA DEPARTMENT OF TRANSPORTATION

CALIBRATION OF PROCTOR MOLD
ARIZ 225 Appendix A

✓ Four Inch Mold _____ Six Inch Mold Mold I. D. #: 4A

Calibration Date: 08/15/15 Calibration Expiration Date: 08/15/16

Temperature of water used for Calibration: 73 ° F

Unit Weight of Water: 62.277 lb. /cu. ft.

Test Operator: Joe Tester Supervisor and Date: Joe Supervisor 08/17/15

Weight of Baseplate, Empty Mold, and Glass Plate (grams)	Weight of Baseplate, Mold Filled with Water, and Glass Plate (grams)	Weight of Water to Fill Mold (grams)
4458.7	5407.9	949.2

$$V = \left[\text{Volume of Mold (cu. ft.)}\right] = \frac{\text{Weight of Water to Fill Mold (grams)}}{\left[\text{Unit Weight of Water (lb. / cu. ft.}\right] \times [453.6 \text{ (grams / lb.)}]}$$

$$V = \frac{(\ 949.2\ )}{(\ 62.277\ ) \times (\ 453.6\ )} = \frac{0.0336}{0.033601371} \text{ cu. ft.}$$

REMARKS: _____

Unit Weight of Water Table

Temp °F	lbs/cu. Ft.	Temp °F	lbs/cu. Ft.
68	62.315	77	62.243
69	62.308	78	62.234
70	62.301	79	62.225
71	62.293	80	62.216
72	62.285	81	62.206
73	62.277	82	62.196
74	62.269	83	62.186
75	62.261	84	62.176
76	62.252	85	62.166
		86	62.155

FIGURE 5

ARIZONA DEPARTMENT OF TRANSPORTATION

CALIBRATION OF PROCTOR MOLD
ARIZ 225 Appendix A

_____ Four Inch Mold _____ Six Inch Mold Mold I. D. #: _____

Calibration Date: _____ Calibration Expiration Date: _____

Temperature of water used for Calibration: _____ ° F

Unit Weight of Water: _____ lb. /cu. ft.

Test Operator: _____ Supervisor and Date: _____

Weight of Baseplate, Empty Mold, and Glass Plate (grams)	Weight of Baseplate, Mold Filled with Water, and Glass Plate (grams)	Weight of Water to Fill Mold (grams)

$$V = \left[\begin{array}{c}\textbf{Volume of}\\ \textbf{Mold}\\ \textbf{(cu. ft.)}\end{array}\right] = \frac{\textbf{Weight of Water to Fill Mold (grams)}}{\left[\begin{array}{c}\textbf{Unit Weight}\\ \textbf{of Water}\\ \textbf{(lb. / cu. ft.}\end{array}\right] \textbf{X}\left[\textbf{453.6 (grams / lb.)}\right]}$$

$$V = \frac{(\qquad\qquad)}{(\qquad\qquad)\ X\ (\qquad\qquad)} = _____ \text{ cu. ft.}$$

REMARKS: _____

Unit Weight of Water Table

Temp °F	lbs/cu. Ft.	Temp °F	lbs/cu. Ft.
68	62.315	77	62.243
69	62.308	78	62.234
70	62.301	79	62.225
71	62.293	80	62.216
72	62.285	81	62.206
73	62.277	82	62.196
74	62.269	83	62.186
75	62.261	84	62.176
76	62.252	85	62.166
		86	62.155

FIGURE 6

FLAKINESS INDEX OF COARSE AGGREGATE

(An Arizona Method)

1. SCOPE

1.1 This test method describes the procedure for determining the "Flakiness Index" (flatness) of coarse No. 8 aggregate]. The Flakiness Index is the percentage of particles having a least dimension smaller than 60 percent of the mean size of each of one or more of the coarse sieve fractions. The lower the index for any sample of aggregate, the more nearly the aggregate particles approximate a cubical shape.

1.2 Once the Flakiness Index is known, the average least dimension of the aggregate can be determined if required, for example as in Arizona Test Method 819, “Design of Exposed Aggregate Seal Coats”. The procedure for determining the average least dimension of the aggregate is described in Section 6 of this test method.

1.3 This test method may involve hazardous material, operations, or equipment. This test method does not purport to address all of the safety concerns associated with its use. It is the responsibility of the user to consult and establish appropriate safety and health practices and determine the applicability of any regulatory limitations prior to use.

1.4 See Appendix A1 of the Materials Testing Manual for information regarding the procedure to be used for rounding numbers to the required degree of accuracy.

2. APPARATUS

2.1 Requirements for the frequency of equipment calibration and verification are found in Appendix A3 of the Materials Testing Manual.

2.2 For each size of material to be tested, a 16 gauge steel plate 1/16 inch nominal thickness] with a slotted opening approximately 4 inches in length and having a width conforming to the applicable requirements given below. If desired, the same plate may contain all or some of the required slots, rather than a separate plate for each.

Size of Material Passing	Size of Material Retained	Slot Width (inches)	Slot Width Tolerance (inches)
1-1/2"	1"	0.738	± 0.023
1"	3/4"	0.520	± 0.016
3/4"	1/2"	0.372	± 0.012
1/2"	3/8"	0.260	± 0.008
3/8"	1/4"	0.187	± 0.006
1/4"	No. 4	0.131	± 0.004
No. 4	No. 8	0.084	± 0.003

2.3 A balance or scale capable of measuring the maximum weight to be determined and conforming to the requirements of AASHTO M 231, except the readability and sensitivity of any balance or scale utilized shall be at least one gram.

2.4 Sieves conforming to the requirements of AASHTO M 92, of sizes 1-1/2", 1", 3/4", 1/2", 3/8", 1/4", No. 4, and No. 8, as necessary for the material being tested.

3. SAMPLE PREPARATION

3.1 A representative sample of the aggregate for the specified use shall be obtained. The size of sample shall be at least the size required by Arizona Test Method 201, and larger if necessary to provide adequate material for the applicable required individual size fractions indicated below. See Subsection 3.3 below for determination of the individual size fractions to be tested.

Size of Material Passing	Size of Material Retained	Minimum Test Sample (grams)
1-1/2"	1"	3000
1"	3/4"	1500
3/4"	1/2"	1000
1/2"	3/8"	500
3/8"	1/4"	200
1/4"	No. 4	100
No. 4	No. 8	50

3.2 The sample shall be subjected to sieve analysis in accordance with Arizona Test Method 201. If both the coarse and fine sieve analysis of the material are

performed, material passing the No. 4 sieve shall be separated into No. 8 and passing No. 8 fractions by sieving over a No. 8 sieve. Reference can also be made to Section 3 of Arizona Test Method 248 for utilizing a No. 8 sieve in the coarse sieving, and a fine sieve analysis not being required. The coarse aggregate size fractions of No. 8 and larger shall be placed in individual containers. The material passing the No. 8 sieve may be discarded.

3.3 From each size fraction that has a percent retained value from sieve analysis which is equal to or greater than 10%, obtain a representative test sample of the weight specified in Subsection 3.1 above.

4. FLAKINESS INDEX TEST PROCEDURE

4.1 Weigh each test sample to the nearest gram and record as the "Weight of Test Sample", for the respective size fraction.

4.2 The particles from the test sample for each size fraction shall be individually tested for their ability to pass through the appropriate slot, as specified in Subsection 2.2. Weigh the material which passes the appropriate slot, and record to the nearest gram as the "Weight Passing Slot", for the respective size fraction.

5. CALCULATIONS FOR FLAKINESS INDEX DETERMINATION

5.1 Figure 1 is an example of the calculations. Figure 2 is a blank Flakiness Index form which contains the required calculations.

5.2 Calculate the "Percent Passing Slot", for each respective size fraction, and record to the nearest percent.

5.3 Calculate the "Flakiness Index", and report the result to the nearest percent.

6. DETERMINATION OF AVERAGE LEAST DIMENSION OF AGGREGATE

6.1 When it is required (such as in Arizona Test Method 819), the average least dimension of the aggregate may be determined by using Figures 3 and 4. (These figures include an example which illustrates the procedure described in the paragraphs below.)

6.2 The median size of the aggregate is determined as shown in the example in Figure 3. Plot the % passing from sieve analysis for the two sieve sizes sufficient to locate the 50% line intercept. Draw a line between the two points. From the 50% passing point on the right side of the chart, proceed horizontally to the left until the line drawn between the two points is intercepted. Draw a line vertically from this point to intercept the "Median Size" scale at the bottom of the chart. Read the resultant median size to the nearest 0.01 inch.

6.3 The average least dimension of the aggregate is determined as shown in the example in Figure 4. Find the point for "Median Size" on the left side of the chart. Proceed horizontally to the right until the corresponding line for Flakiness Index is intercepted. Draw a line vertically from this point to intercept the "AVERAGE LEAST DIMENSION" at the bottom of the chart. Read and record the average least dimension of the aggregate to the nearest 0.01 inch.

FLAKINESS INDEX CALCULATIONS

(ARIZONA TEST METHOD 233)

Project No.: _____ Lab No.: _____ Material: _____

Sieve Size	1-1/2"	1"	3/4"	1/2"	3/8"	1/4"	#4	# 8
% Pass from Sieve Analysis				100	78	27	13	2
% Ret. From Sieve Analusis **(F)**				0	22	51	14	11
Weight of Test Sample				-	611	263	139	78
Weight Passing Slot				-	104	71	28	19
* Percent Passing Slot **(P)**				-	17	27	20	24

NOTE: Only the size fractions which have 10 or more percent retained are tested for passing the apporpriate slot, and uses to determine the flakiness Index by the equation below.

$$\text{*Percent Passing Slot (P)} = \frac{\text{Weight Passing Slot}}{\text{Weight of Test Sample}} \times 100$$

$$\text{FLAKINESS INDEX} = \frac{[\mathbf{F}\ 1\text{-}1/2'' \times \mathbf{P}\ 1\text{-}1/2''] + \ldots + \ldots + [\mathbf{F}\ \text{No. } 8 \times \mathbf{P}\ \text{No. } 8]}{[\mathbf{F}\ 1\text{-}1/2'' + \ldots + \ldots + [\mathbf{F}\ \text{No. } 8]}$$

$$\text{FLAKINESS INDEX} = \frac{+ \quad + \quad +}{+ \quad + \quad +} = _____\ \%$$

REMARKS:

_____

_____

_____

_____

_____

Test Operator and Date: _____ Supervisor and Date: _____

FIGURE 1

FLAKINESS INDEX CALCULATIONS

(ARIZONA TEST METHOD 233)

Project No.: _____ Lab No.: _____ Material: _____

Sieve Size	1-1/2"	1"	3/4"	1/2"	3/8"	1/4"	#4	# 8
% Pass from Sieve Analysis								
% Ret. From Sieve Analusis **(F)**								
Weight of Test Sample								
Weight Passing Slot								
* Percent Passing Slot **(P)**								
NOTE: Only the size fractions which have 10 or more percent retained are tested for passing the apporpriate slot, and uses to determine the flakiness Index by the equation below.	$*\text{Percent Passing Slot (P)} = \frac{\text{Weight Passing Slot}}{\text{Weight of Test Sample}} \times 100$							

$$\text{FLAKINESS INDEX} = \frac{[\mathbf{F}\ 1\text{-}1/2'' \times \mathbf{P}\ 1\text{-}1/2''] + \ldots + \ldots + [\mathbf{F}\ \text{No. } 8 \times \mathbf{P}\ \text{No. } 8]}{[\mathbf{F}\ 1\text{-}1/2'' + \ldots + \ldots + [\mathbf{F}\ \text{No. } 8]}$$

$$\text{FLAKINESS INDEX} = \frac{___ \times ___) + (___ \times ___) + (___ \times ___) + (___ \times ___)}{(___ + ___ + ___ + ___)} = _____ \%$$

REMARKS:

_____

_____

_____

_____

_____

Test Operator and Date: _____ Supervisor and Date: _____

FIGURE 2

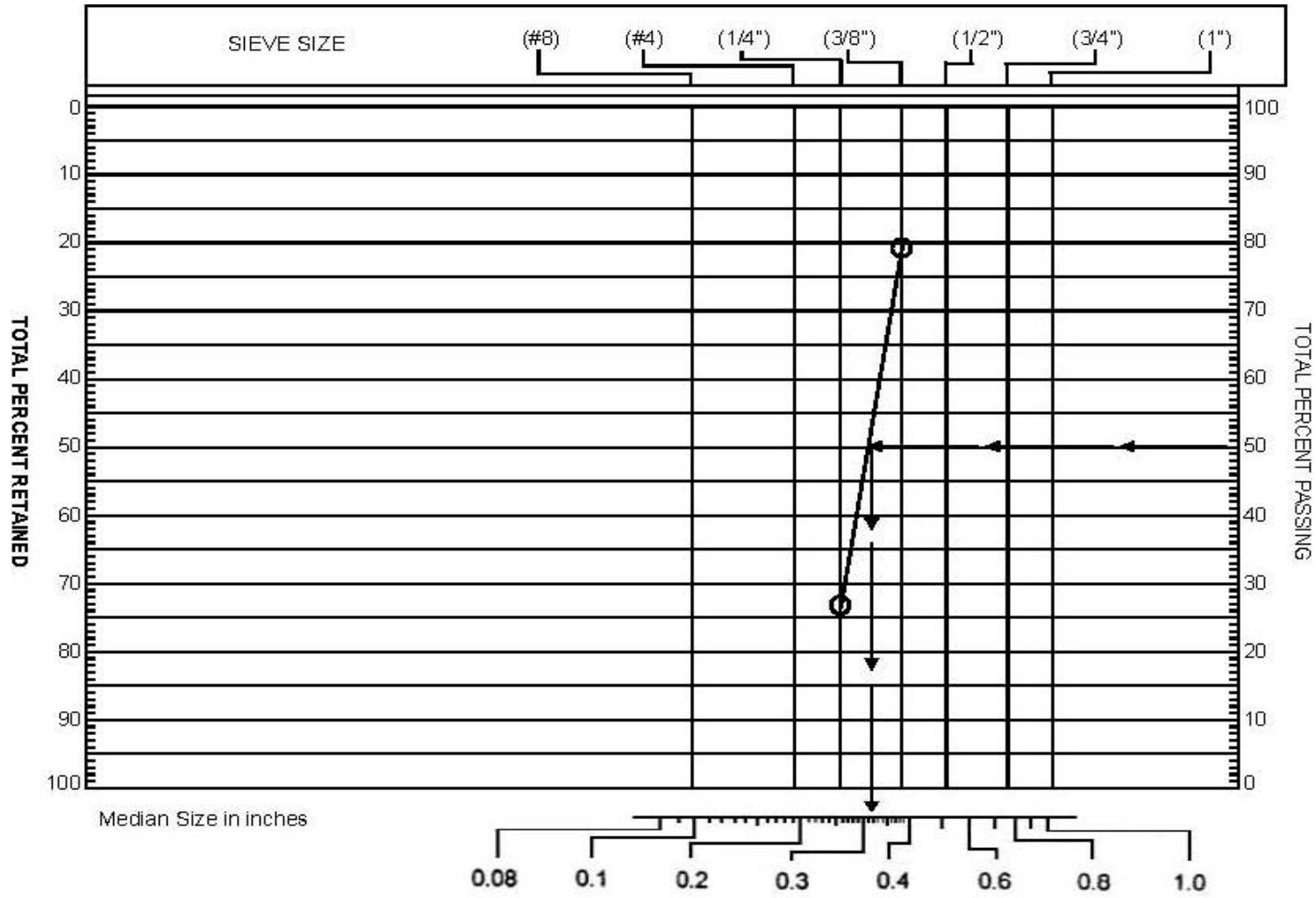

GRADING CHART FOR DETERMINING MEDIAN SIZE OF AGGREGATE

FIGURE 3

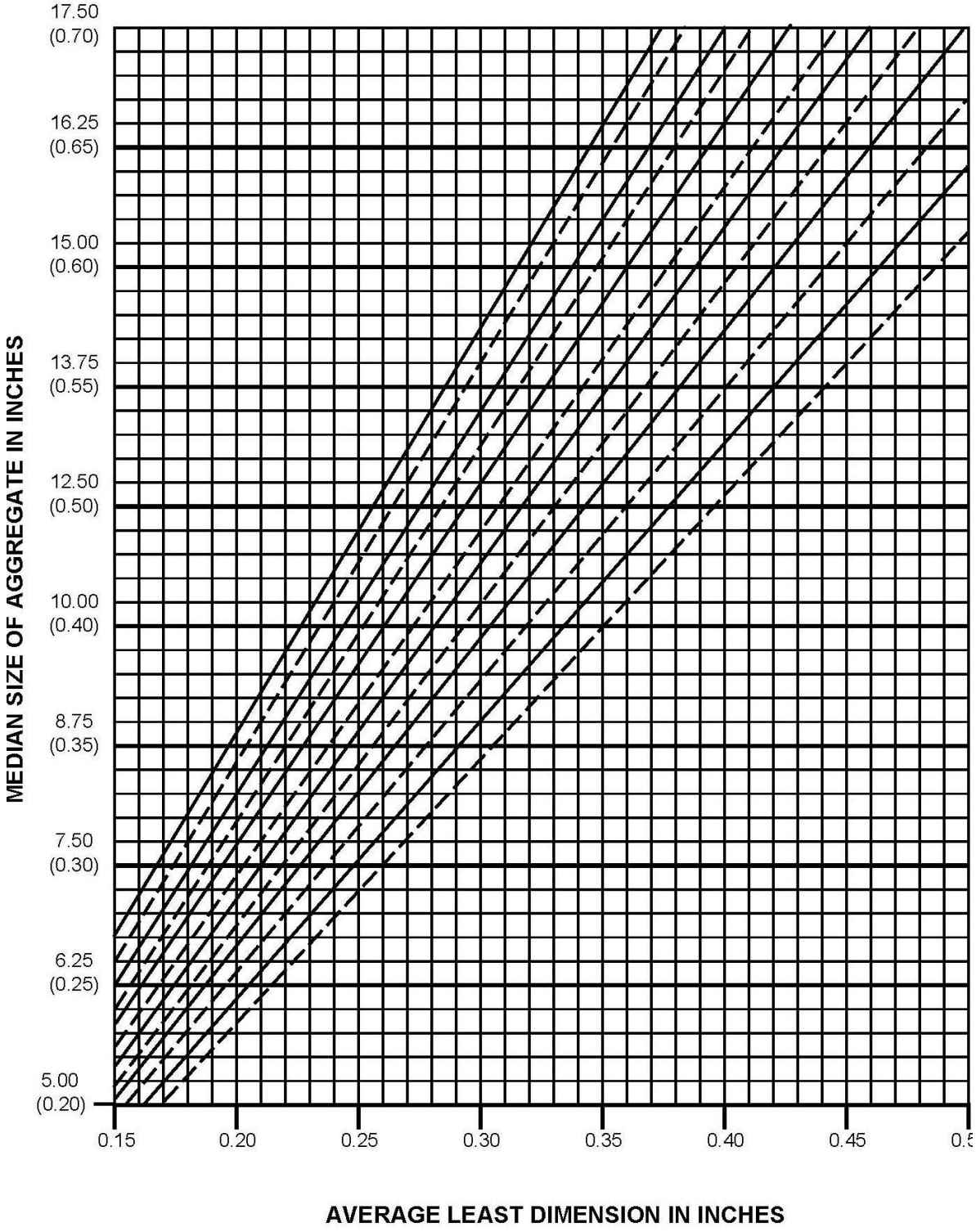
17.50
(0.70)
16.25
(0.65)
15.00
(0.60)
13.75
(0.55)
12.50
(0.50)
10.00
(0.40)
8.75
(0.35)
7.50
(0.30)
6.25
(0.25)
5.00
(0.20)
MEDIAN SIZE OF AGGREGATE IN INCHES
0.15
0.20
0.25
0.30
0.35
0.40
0.45
AVERAGE LEAST DIMENSION IN INCHES

FIGURE 4

MAXIMUM DRY DENSITY AND OPTIMUM MOISTURE OF SOILS BY PROCTOR ALTERNATE METHOD D

(A Modification of AASHTO Designation T 99)

1. SCOPE

1.1 This test method describes the procedure for determining the maximum dry density and optimum moisture content for a soil by the Alternate Method D Proctor Method.

1.2 Alternate Method D may be used for all maximum dry density and optimum moisture content determinations except for volcanic cinders or light porous material on which the specific gravity cannot be determined with consistency or when the moisture absorption for the coarse aggregate is greater than 4.0%.

1.3 Alternate Method D may be used except when greater than 40% of the material is retained on the 3/4 inch sieve.

1.4 An example is provided in Figure 2 for the calculations and determinations referenced herein.

1.5 This test method may involve hazardous materials, operations, and equipment. This test method does not purport to address all of the safety problems associated with its use. It is the responsibility of whomever uses this test method to consult and establish appropriate safety and health practices and determine the applicability of regulatory limitations prior to use.

2. APPARATUS

2.1 Requirements for the frequency of equipment calibration and verification are found in Appendix A3 of the Materials Testing Manual.

2.2 6 inch proctor mold having a capacity of approximately 1/13.33 cubic foot, with an internal diameter of 6.000 plus 0.039 or minus 0.026 inches and a height of

4.584 plus 0.005 or minus 0.008 inches. The mold shall have a nominal wall thickness of 1/4 inch. It shall be equipped with an extension collar approximately 2-3/8 inches high. A baseplate as shown in Figure 1 shall be provided.

2.3 A hand or mechanical rammer weighing 5.50 ± 0.02 pounds, having a flat face, and equipped with a suitable arrangement to control the height of drop to a free fall of 12 ± 0.06 (1/16) inches above the elevation of the soil. The hand rammer face shall be circular with a diameter of 2.000 plus 0.010 or minus 0.015 inches. The mechanical rammer face shall have the shape of a piece of pie, with a radius of approximately 3 inches, and having an area of 3.134 ± 0.039 square inches. If a mechanical apparatus is used, it must be monitored through the ADOT proficiency sample program and maintain a rating of 3 or better based on the results of testing ADOT and AMRL proficiciency samples.

2.4 Hardened-steel straightedge, at least 10 inches in length. It shall have one beveled edge, and at least one longitudinal surface (used for final trimming) shall be plane within 0.01 inch per 10 inches (0.1 percent) of length with the portion used for trimming the soil.

2.5 Scale or balance capable of measuring the maximum weight to be determined, accurate to at least one gram.

2.6 Scale or balance capable of measuring the maximum weight to be determined, accurate to at least 0.1 gram.

2.7 Oven capable of maintaining a temperature of 230 ± 9 °F.

2.8 3/4 inch and 3 inch sieves conforming to the requirements of AASHTO M 92.

2.9 Miscellaneous mixing tools and pans.

2.10 Sample Extruder (optional) consisting of a jack, lever, frame, or other device for extruding the compacted sample from the mold.

3. CALIBRATION OF MOLD

3.1 Molds shall be calibrated in accordance with APPENDIX A of Arizona Test Method 225.

4. SAMPLE

4.1 Enough soil material shall be provided from the field to make five compacted specimens. A minimum sample size of 45,000 grams (approximately 100 lbs.) is normally required.

4.2 If the soil sample is damp when received from the field, dry it until it becomes friable under a trowel. Drying may be in air or by use of a slow fan or other drying apparatus such that the temperature of the sample does not exceed 140 °F.

4.3 Thoroughly break up the aggregations in such a manner as to avoid reducing the natural size of individual particles.

4.4 Weigh out an approximate 45,000 gram sample of representative soil. Record the weight of the sample, and sieve the material over a 3/4 inch sieve. If the percentage of coarse aggregate or rock retained on the 3/4 inch sieve is not already known from gradation testing, save any material retained on the 3/4 inch sieve and weigh. Calculate the percent of coarse aggregate or rock particles retained on the 3/4 inch sieve according to the following equation:

$$PR3/4 = \frac{WR3/4}{WT} \times 100$$

Where: PR3/4 = Percentage of coarse aggregate or rock particles retained on the 3/4 inch sieve

WR3/4 = Weight of coarse aggregate or rock particles retained on the 3/4 inch sieve

WT = Total weight of material sieved

4.5 If "PR3/4" is greater than 40%, then too much rock is present to allow for a reasonable maximum dry density determination If "PR3/4" is less than or equal to 40%, blend material passing the 3/4 inch sieve thoroughly and proceed to Section 5 of this test method. If a specific gravity and absorption determination, in accordance with AASHTO T 85, is to be made for the plus 3/4 inch material, save an adequate amount of this material, otherwise, discard it.

5. PROCEDURE

5.1 From the thoroughly blended passing 3/4 inch material from Subsection 4.5, split out 5 representative approximate 5000 gram samples.

5.2 Select one sample and thoroughly mix with sufficient water to dampen it to approximately three percentage points below optimum moisture content.

Note: If desired, an additional three samples may be mixed at this time with approximate moisture contents of 1% below optimum, 1% over optimum, and 3% over optimum. The moisture in each of these samples shall be retained by covering with a damp cloth or being sealed in air tight containers until they are compacted. One of the five samples should be retained for future use since it is necessary to have at least two points defined on each side of the moisture-density curve.

5.3 Heavy clay soils or materials which tend to break down, or those in which it is difficult to incorporate water, shall require approximately 12 hours for uniform moisture absorption to be achieved. This shall be accomplished by preparing separate samples for each increment of water to be added, and then placing and sealing these samples in air tight containers for the 12-hour period.

5.4 Form a specimen by compacting the prepared soil in the six inch mold (with extension collar attached) in three equal layers to give a total compacted depth of about 5 inches. Compact each layer with 56 uniformly distributed blows from the rammer, dropping free from a height of 12 inches. While each layer is being compacted, the remainder of material shall be in a pan covered by a damp cloth. During compaction, the mold shall rest firmly on a dense, uniform, rigid and stable foundation.

Note: Each of the following has been found to be a satisfactory base on which to rest the mold during compaction of the soil: A block of concrete, weighing not less than 200 lbs., supported by a stable foundation; a sound concrete floor; and for field application, such surfaces as found in concrete box culverts, bridges, and pavements.

5.5 When compacting granular, free-draining materials, at moisture contents which are at or above optimum, the mold shall be prepared by first sealing the bottom

of the mold with waterproofing grease. All excess grease shall be wiped from the mold and baseplate.

5.6 Following compaction, carefully remove the extension collar. It may be necessary to use a follower to retain the soil in the mold while removing the collar to prevent damage or disturbance of the soil below the top of the mold. Carefully trim the compacted soil even with the top of the mold by means of the straightedge. If any voids are created during trimming, these shall be filled with fine material and smoothed off. Determine the weight of compacted specimen and mold. Determine the wet density, "WD", of the compacted soil by the following:

$$WD = \frac{M1 - M2}{VM \times 453.6 \text{ (grams/lb.)}}$$

Where: WD = Wet density of compacted soil, lb./cu. ft.
M1 = Weight of compacted specimen and mold, grams
M2 = Weight of the mold, grams
VM = Volume of the mold, cu. ft. (See Section 3 of this procedure.)

5.7 The estimated dry density, "ED", of the compacted soil may be calculated and recorded to the nearest 0.1 lb./cu. ft. as follows:

$$ED = \frac{WD}{\text{(Approx. \% of water added)} + 100} \times 100$$

Where: ED = Estimated dry density of compacted soil, lb./cu. ft.
WD = Wet density of compacted soil, lb./cu. ft.

Note: These estimated densities are approximate only and will be corrected when final moisture results are obtained.

5.8 The estimated dry density is useful in deciding how much water to add in later trial batches, if the procedure described in the note following Subsection 5.2, for initially preparing three additional samples with varying moisture contents is not utilized. By carefully observing the estimated dry density of the compacted

samples, the operator should be able to vary the moisture content as the test proceeds so that when the final moisture-density results are plotted, a curve will result that rises to a peak and then falls away.

5.9 Remove the material from the mold and slice vertically through the center. Take a representative minimum 600 gram sample from the full length and width of one of the cut faces. Weigh immediately, and dry to a constant weight in an oven at 230 ± 9 °F to determine the moisture content in accordance with AASHTO T 265. Record the weight of wet soil to the nearest 0.1 gram as "WW", and record the weight of oven dry soil to the nearest 0.1 gram as "DW".

5.10 For granular, free-draining materials, the moisture content shall be determined using the entire compacted proctor specimen. Determine the weight of wet soil, "WW", by subtracting the weight of the mold, "M2", from the weight of compacted specimen and mold, "M1". Record the weight of wet soil, "WW", and the weight of oven dry soil, "DW", to at least the nearest gram. All clinging material shall be removed from the inside of the mold and included with the specimen. To facilitate drying, the specimen may be broken up and spread out in a large pan, being careful to not lose any soil particles.

5.11 Select another of the samples which was split in Subsection 5.1, and if not already done, thoroughly mix with water in sufficient amount to increase the moisture content by approximately two percentage points.

5.12 Repeat the procedure in Subsections 5.2 through 5.9 for the sample at each moisture content, as necessary to establish a moisture-density curve which rises to a peak and then falls away.

6. CALCULATIONS

6.1 Calculate percent moisture and record to the nearest 0.1 percent by the following:

$$\% \text{ Moisture} = \frac{WW - DW}{DW} \times 100$$

Where: WW = weight of wet soil, grams
DW = weight of oven dry soil, grams

6.2 Calculate dry density and record to the nearest 0.1 lb./cu. ft. by the following:

$$DD = \frac{WD}{\% \text{ Moisture} + 100} \times 100$$

Where: DD = Dry density of compacted soil, lb./cu. ft.
WD = Wet density of compacted soil, lb./cu. ft.

7. MOISTURE-DENSITY RELATIONSHIP

7.1 The percent moisture and corresponding dry density for each of the compacted soil specimens shall be plotted on the graph provided on the proctor density test form shown in Figure 3. For a good plot, the majority of the graph is utilized. Normally, three increments on the horizontal axis shall equal one percent of moisture, and three increments on the vertical axis shall equal one lb./cu. ft. of dry density. If another number of increments other than three is utilized, the number of increments for one percent moisture and one lb./cu. ft. dry density shall always be the same.

7.2 On each side of the maximum density curve, at least two points should be utilized to form two straight lines. The intersection point of these two lines defines the peak point of the density-moisture content relationship, or the maximum density and optimium moisture content for the soil. In general it will be found that higher unit mass soils assume steeper slopes with high maximum dry densities at low optimum moisture contents, while the lower unit mass soils assume flatter, more gently sloped lines with high optimum moisture contents and low maximum dry densities. Figure 4 gives examples of moisture-density

plots which show the different slopes associated with different maximum dry density ranges.

7.3 Optimum moisture content - The percent moisture content corresponding to the peak (intersection point of the two lines) of the moisture-density curve shall be termed the "optimum moisture content", and shall be reported as "OM" to the nearest 0.1 percent.

7.4 Maximum dry density - The dry density at optimum moisture content corresponding to the peak (intersection point of the two lines) of the moisture-density curve shall be termed the "maximum dry density", and shall be reported as "MD" to the nearest 0.1 lb./cu. ft.

Note: The optimum moisture and maximum dry density determinations above are for the material passing the 3/4 inch sieve. When testing field samples for comparison to proctor optimum moisture and maximum dry density, a correction to the proctor optimum moisture and maximum dry density must be made, in accordance with ARIZ 227, for the percent rock which the field sample contains.

8. REPORT

8.1 Record the moisture and density data on the laboratory test form along with the laboratory number, material source and type, and other information required. A blank laboratory test form is provided in Figure 3.

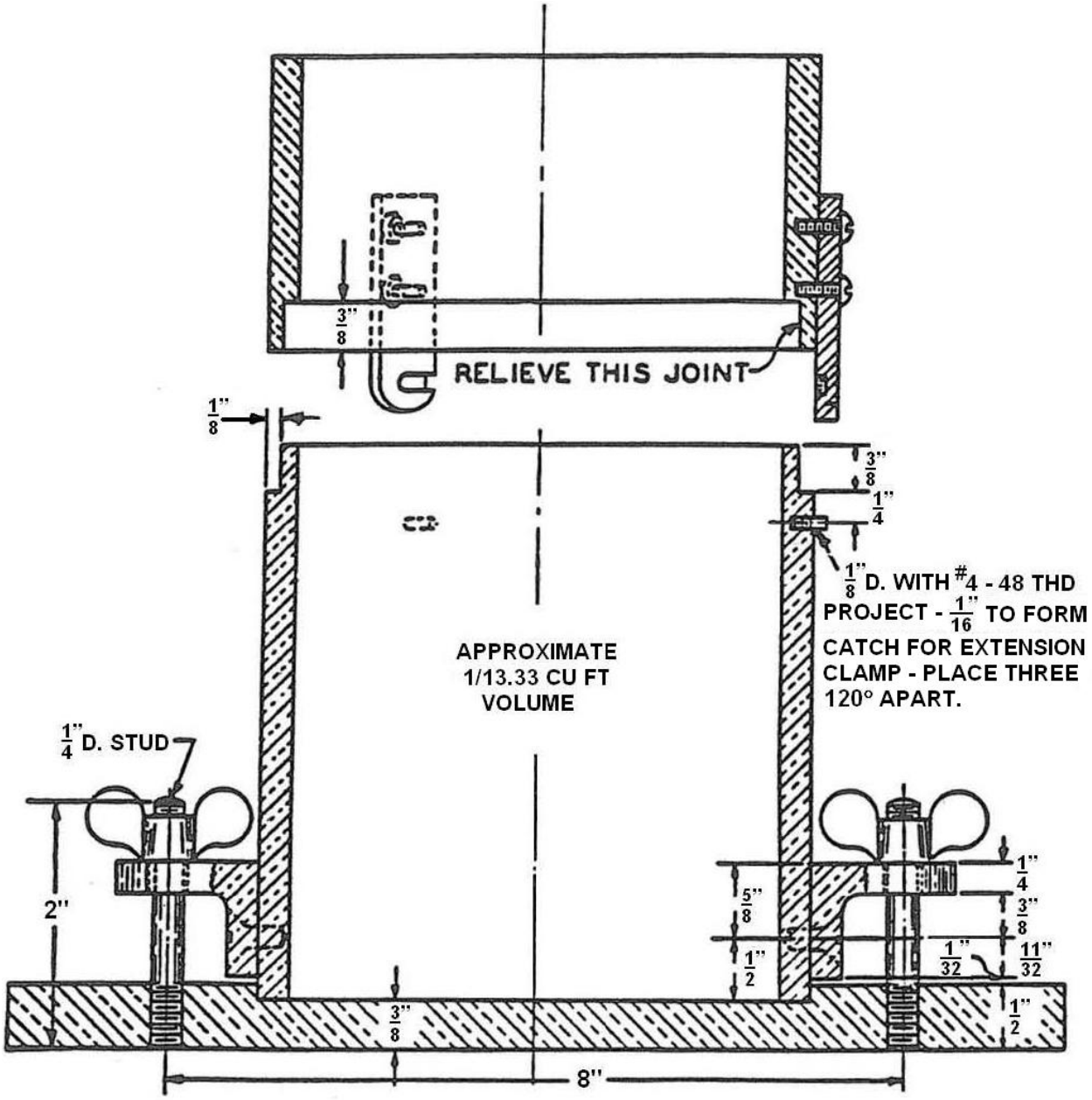

CYLINDERICAL MOLD, COLLAR,
AND BASEPLATE
(6 INCH MOLD)

FIGURE 1

Arizona Department of Transportation
METHOD A or **ALTERNATE METHOD D** PROCTOR DENSITY
(Arizona Test Method 225 or 245)

Project No: _____ Lab No : _____ Rec'd Date: _____
Source and Type of Material : _____
Proctor Method Used : **Method A** _____ or **Alternate Method D** ✓
Test Operator and Date : _____ Supervisor and Date: _____

Weight of Mold = **M2** = **2840** grams | Volume of Mold = **VM** = **0.0744** = lb/cu ft | a = VM x 453.6 = **33.7478** g/cu ft

b	M1	c	WD	ED	Moisture Determination WW	DW	d	e	DD
Approx % of water Added	Wt. of Sample and Mold	Wet Wt. of Sample M1 - M2	Wet Density lb/ cu ft c/a	Est. Dry Density WD x 100 / b + 100	Wet Wt. of Moisture Sample	Dry Wt. of Moisture Sample	Wt. of Water WW - DW	Percent Moisture d x 100 / DW	Dry Density lb/cu ft WD x 100 / e + 100
7	7180	4340	128.6	120.2	655.5	613.8	41.7	6.8	120.4
9	7376	4536	134.4	123.3	685.3	628.7	56.6	9.0	123.3
11	7474	4634	137.3	123.7	658.4	592.1	66.3	11.2	123.5
13	7457	4617	136.8	121.1	645.9	572.1	73.8	12.9	121.2

METHOD A
WT = _____ WR4 = _____
PR4 = WR4 / WT x 100 = _____

ALTERNATE METHOD D
WT = 48780 WR 3/4 = 17951
PR 3/4 = WR 3/4 / WT x 100 = 37 %

Coarse Aggregate Bulk Oven Dry Specific Gravity : 2.631

Coarse Aggregate Absorption : 2.28

OPTIMUM MOISTURE CONTENT = OM = 10.0

MAXIMUM DRY DENSITY (lb. / cu. ft.) = MD = 124.6

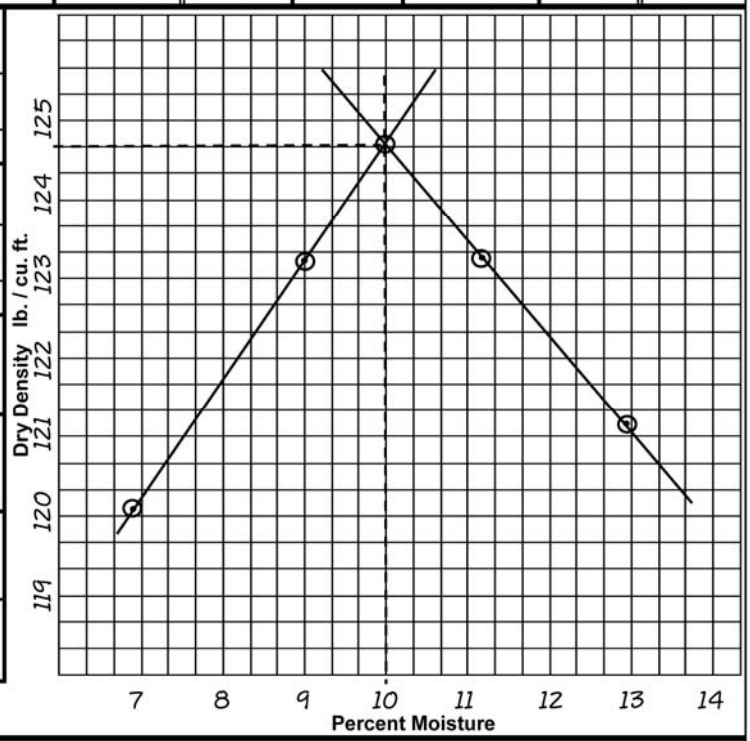

Remarks : _____

FIGURE 2

Arizona Department of Transportation
METHOD A or **ALTERNATE METHOD D** PROCTOR DENSITY
(Arizona Test Method 225 or 245)

Project No: _____ Lab No : _____ Rec'd Date: _____

Source and Type of Material : _____

Proctor Method Used : **Method A** _____ or **Alternate Method D** _____

Test Operator and Date : _____ Supervisor and Date: _____

Weight of Mold = **M2** = _____ grams | Volume of Mold = **VM** = _____ = lb/cu ft | **a** = VM x 453.6 = _____ g/cu ft

b	M1	c	WD	ED	Moisture Determination				DD
					WW	DW	d	e	
Approx % of water Added	Wt. of Sample and Mold	Wet Wt. of Sample M1 - M2	Wet Density lb/ cu ft $\frac{c}{a}$	Est. Dry Density $\frac{WD \times 100}{b + 100}$	Wet Wt. of Moisture Sample	Dry Wt. of Moisture Sample	Wt. of Water WW - DW	Percent Moisture $\frac{d \times 100}{DW}$	Dry Density lb/cu ft $\frac{WD \times 100}{e + 100}$

METHOD A

WT = _____ WR4 = _____

PR4 = $\frac{WR4}{WT}$ x 100 = _____

ALTERNATE METHOD D

WT = _____ WR 3/4 = _____

PR 3/4 = $\frac{WR\ 3/4}{WT}$ x 100 = _____ %

Coarse Aggregate
Bulk Oven Dry
Specific Gravity : _____

Coarse Aggregate
Absorption : _____

OPTIMUM MOISTURE
CONTENT = OM = _____

MAXIMUM DRY DENSITY
(lb. / cu. ft.) = MD = _____

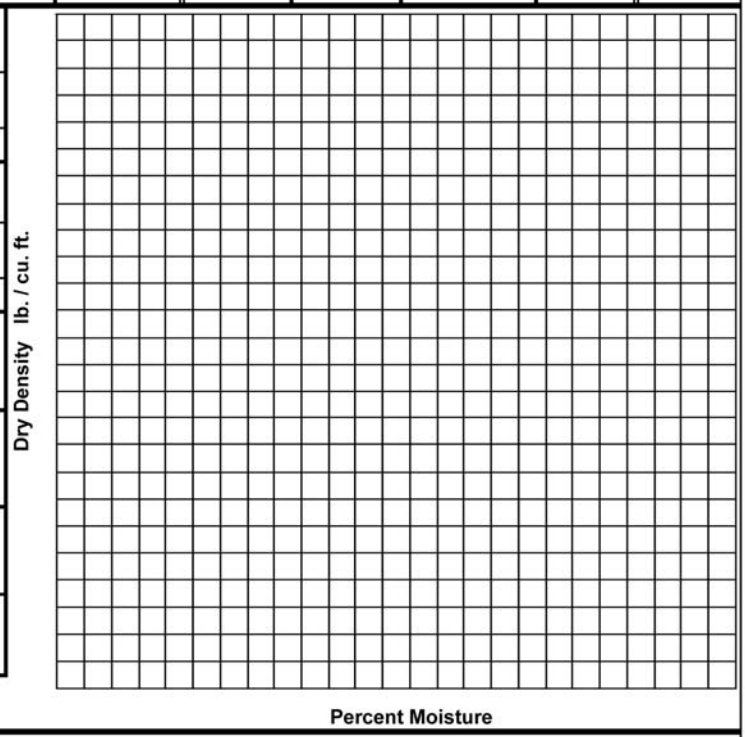

Remarks : _____

FIGURE 3

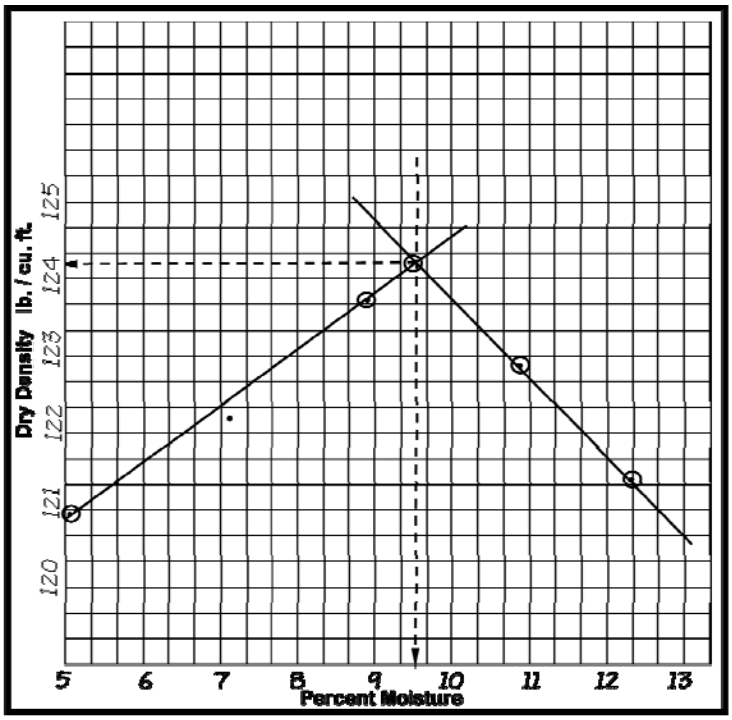

AGGREGATE BASE COURSE

% Moisture	Dry Density
5.1	120.8
7.1	122.1
8.9	123.7
10.8	122.7
12.3	121.3

Moisture Density = 124.1 lb/cu ft
Optimum Moisture = 9.4 %

SILTY SAND AND GRAVEL

% Moisture	Dry Density
7.2	127.0
8.1	129.6
9.4	127.9
10.1	126.6

Moisture Density = 130.0 lb/cu ft
Optimum Moisture = 8.3 %

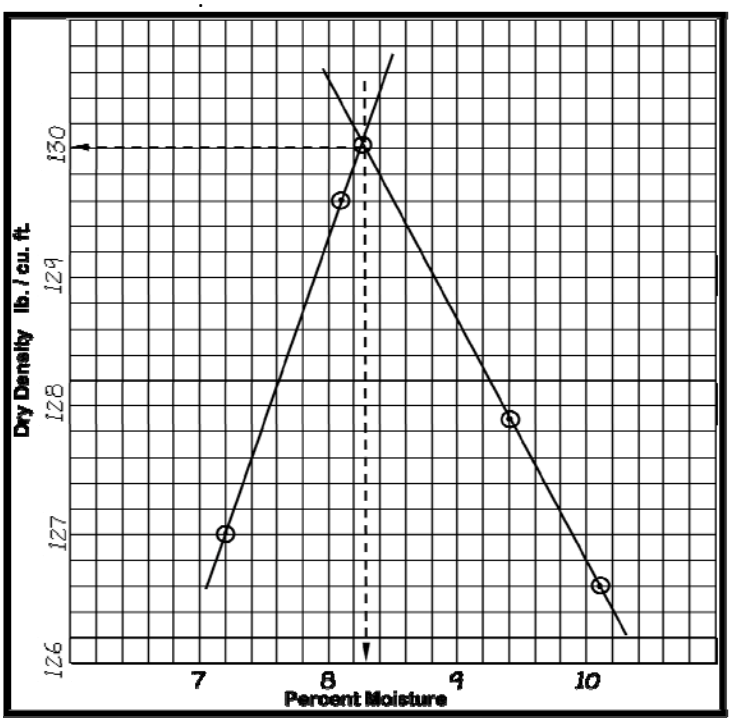

FIGURE 4

ADOT Intermodal Transportation

ARIZONA DEPARTMENT OF TRANSPORTATION

CALIBRATION OF PROCTOR MOLD
ARIZ 225 Appendix A

____ Four Inch Mold ✓ Six Inch Mold Mold I. D. #: 6A

Calibration Date: 09/15/15 Calibration Expiration Date: 09/15/16

Temperature of water used for Calibration: 75 ° F

Unit Weight of Water: 62.261 lb. /cu. ft.

Test Operator: Joe Tester Supervisor and Date: Joe Supervisor 09/17/15

Weight of Baseplate, Empty Mold, and Glass Plate (grams)	Weight of Baseplate, Mold Filled with Water, and Glass Plate (grams)	Weight of Water to Fill Mold (grams)
6185.8	8287.0	2101.2

$$V = \begin{bmatrix} \text{Volume of Mold (cu. ft.)} \end{bmatrix} = \frac{\text{Weight of Water to Fill Mold (grams)}}{\begin{bmatrix} \text{Unit Weight of Water (lb. / cu. ft.} \end{bmatrix} \times [453.6 \text{ (grams / lb.)}]}$$

$$V = \frac{(2101.2)}{(62.261) \times (453.6)} = \frac{0.0744}{0.074400911} \text{ cu. ft.}$$

28241.5896

REMARKS:

Unit Weight of Water Table

Temp °F	lbs/cu. Ft.	Temp °F	lbs/cu. Ft.
68	62.315	77	62.243
69	62.308	78	62.234
70	62.301	79	62.225
71	62.293	80	62.216
72	62.285	81	62.206
73	62.277	82	62.196
74	62.269	83	62.186
75	62.261	84	62.176
76	62.252	85	62.166
		86	62.155

FIGURE 5

ARIZONA DEPARTMENT OF TRANSPORTATION

CALIBRATION OF PROCTOR MOLD
ARIZ 225 Appendix A

_____ Four Inch Mold _____ Six Inch Mold Mold I. D. #: _____

Calibration Date: _____ Calibration Expiration Date: _____

Temperature of water used for Calibration: _____ ° F

Unit Weight of Water: _____ lb. /cu. ft.

Test Operator: _____ Supervisor and Date: _____

Weight of Baseplate, Empty Mold, and Glass Plate (grams)	Weight of Baseplate, Mold Filled with Water, and Glass Plate (grams)	Weight of Water to Fill Mold (grams)

$$V = \frac{\text{Weight of Water to Fill Mold (grams)}}{\left[\begin{array}{c}\text{Unit Weight}\\ \text{of Water}\\ \text{(lb. / cu. ft.}\end{array}\right] \times [453.6 \text{ (grams / lb.)}]}$$

$$V = \frac{(\qquad\qquad)}{(\qquad\qquad) \times (\qquad\qquad)} = _____ \text{ cu. ft.}$$

REMARKS: _____

Unit Weight of Water Table

Temp °F	lbs/cu. Ft.	Temp °F	lbs/cu. Ft.
68	62.315	77	62.243
69	62.308	78	62.234
70	62.301	79	62.225
71	62.293	80	62.216
72	62.285	81	62.206
73	62.277	82	62.196
74	62.269	83	62.186
75	62.261	84	62.176
76	62.252	85	62.166
		86	62.155

FIGURE 6

PARTICLE SHAPE AND TEXTURE OF FINE AGGREGATE USING UNCOMPACTED VOID CONTENT

(A Modification of AASHTO T 304)

1. SCOPE

1.1 This method covers the determination of the "Uncompacted Void Content" of a fine aggregate for use as a measure of its angularity and texture.

1.2 This test method may involve hazardous material, operations, or equipment. This test method does not purport to address all of the safety concerns associated with its use. It is the responsibility of whoever uses this test method to consult and establish appropriate safety and health practices and determine the applicability of regulatory limitations prior to use.

1.3 This procedure provides a numerical result in terms of percent void content, determined under standardized conditions, which correlates with the particle shape and texture properties of a fine aggregate. An increase in void content indicates greater angularity and rougher texture. Lower void content results are associated with more rounded smooth particles.

1.4 See Appendix A1 of the Materials Testing Manual for information regarding the procedure to be used for rounding numbers to the required degree of accuracy.

2. APPARATUS

2.1 Requirements for the frequency of equipment calibration and verification are found in Appendix A3 of the Materials Testing Manual.

2.2 A funnel having a volume of at least 200 cm^3, or being equipped with a supplemental container to provide the required volume. (See Figure 1)

2.3 Funnel Stand - A support capable of holding the funnel firmly in position with its axis vertically in line with the axis of the measure, and the funnel opening 4.5 ± 0.1 inches above the top of the cylinder. A suitable arrangement is shown in Figure 1.

2.4 Measure - A cylinder of approximately 100 cm^3 capacity. (See Figure 2)

2.5 A flat metal or plastic pan of sufficient size for containing the funnel stand, and preventing loss of material that overflows the measure during filling and strike off. The pan shall not be warped so as to prevent rocking of the apparatus during testing.

2.6 A straight metal spatula at least 1” greater than the diameter of the measure and at least 1/2" wide. The end shall be cut at a right angle to the edges. The straight edge of the spatula is used to strike off the fine aggregate. (See Figure 3)

2.7 A balance or scale capable of measuring the maximum weight to be determined and conforming to the requirements of AASHTO M 231, except the readability and sensitivity of any balance or scale utilized shall be at least 0.1 gram.

2.8 Sieves of sizes No. 8, No. 16, No. 30, No. 50 and No. 100, conforming to the requirements of AASHTO M 92.

3. CALIBRATION OF MEASURE

3.1 Determine and record the weight of the dry, empty measure and a flat, glass plate slightly larger than it's diameter. Fill the measure with water at a temperature of 77 ± 1 °F. Place the glass plate on the measure, being sure that no air bubbles remain. It may be necessary to lightly coat the top edge of the measure with grease prior to determining the weight of the empty measure and glass plate. Dry the outer surfaces of the measure and determine and record the combined weight of measure, glass plate, and water.

3.2 Determine and record the volume of the measure to the nearest 0.01 cm^3 by the following calculation:

$$V = \frac{w}{0.997}$$

Where: V = volume of cylinder in cm^3
w = net weight of water in grams
0.997 g/cm^3 = the density of water at 77 ± 1 °F

4. SAMPLE PREPARATION

4.1 Obtain a sample of minus #8 material of sufficient size (but not less than 500 grams) to yield the quantities required in Subsection 4.3 below. The sample used for this test may either be virgin aggregate, or aggregate obtained from the extraction of a bituminous mixture.

4.2 Utilizing either a No. 100 or a No. 200 sieve, wash the sample in accordance with either Section 6 or 7 of Arizona Test Method 201. Dry the material to constant weight and sieve into size fractions as indicated in Subsection 4.3 below. Maintain the material in a dry condition in separate containers for each of the sizes specified. The sieving is to be accomplished in accordance with Arizona Test Method 201.

Note: Processing additional material may be required.

4.3 Weigh out and combine the following quantities of dry fine aggregate from each of the sizes below:

PASS	RETAINED	WEIGHT IN GRAMS	ACCUM. WEIGHT
# 8	# 16	44 ± 0.2	44 ± 0.2
# 16	# 30	57 ± 0.2	101 ± 0.4
# 30	# 50	72 ± 0.2	173 ± 0.6
# 50	# 100	17 ± 0.2	190 ± 0.8

5. PROCEDURE

5.1 If the fine aggregate has become moist, dry to constant weight and cool to room temperature.

5.2 Record the weight of the empty measure to the nearest 0.1 gram, place the funnel and measure in the funnel stand, and place the assembly in the pan described in Subsection 2.5.

5.3 Mix the test sample until it appears homogeneous. Using a finger to block the opening, pour the test sample into the funnel. Lightly level the top of the material using the end of the spatula. Remove the finger and allow the sample to fall freely into the measure.

5.4 After the funnel empties, remove excess fine aggregate from the measure by a single pass of the spatula with the edge of the blade vertical and in light contact with the top of the measure. Until this operation is complete, exercise care to avoid vibration or disturbance that could cause compaction of the fine aggregate in the measure. After strike-off, tap the measure lightly to compact the sample to make it easier to transfer the measure to the balance without spilling any of the sample. Brush adhering material from the outside of the measure and determine and record the weight of the measure and contents to the nearest 0.1 gram. (See Figure 3)

Note: The intent of this process is to allow the sample to flow freely into the measure without any vibrations or disturbance of the cylinder until the operation is complete. The cylinder may be held during strikeoff as long as there is no vibration or disturbance from the strike off process.

5.5 Collect all of the fine aggregate from the pan and measure, and repeat the procedure again.

5.6 For each determination, record the net weight of the fine aggregate in the measure. If the two net weights differ by 0.5 gram or less, average the two weights and record to the nearest 0.1 gram as the "average net weight of fine aggregate in measure", (W). If the two weights differ by more than 0.5 gram, the procedure shall be repeated until any two results are achieved which differ by 0.5 gram or less. The average of these two results is recorded to the nearest 0.1 gram as the "average net weight of fine aggregate in measure", (W).

6. CALCULATION

6.1 Determine and record the "Uncompacted Void Content" (U), to the nearest 0.1% by the following calculation:

$$U = \frac{V - (W/G)}{V} \times 100$$

Where:
- U = Uncompacted Void Content, percent.
- V = volume of measure in cm^3.
- W = average net weight of fine aggregate in measure.
- G = bulk oven dry specific gravity of fine aggregate, measured in accordance with Arizona Test Method 211, "Specific Gravity and Absorption of Fine Aggregate".

6.2 For most aggregate sources the fine aggregate specific gravity does not vary much from sample to sample. It is intended that the value used in the above calculation be from a routine specific gravity test which is representative of the fine aggregate. A difference in specific gravity of 0.05 will change the calculated "Uncompacted Void Content" about one percent.

7. REPORT

7.1 The "Uncompacted Void Content" (U), to the nearest 0.1%.

7.2 The bulk oven dry specific gravity of the fine aggregate (G), to the nearest 0.001.

FUNNEL, FUNNEL STAND, AND MEASURE

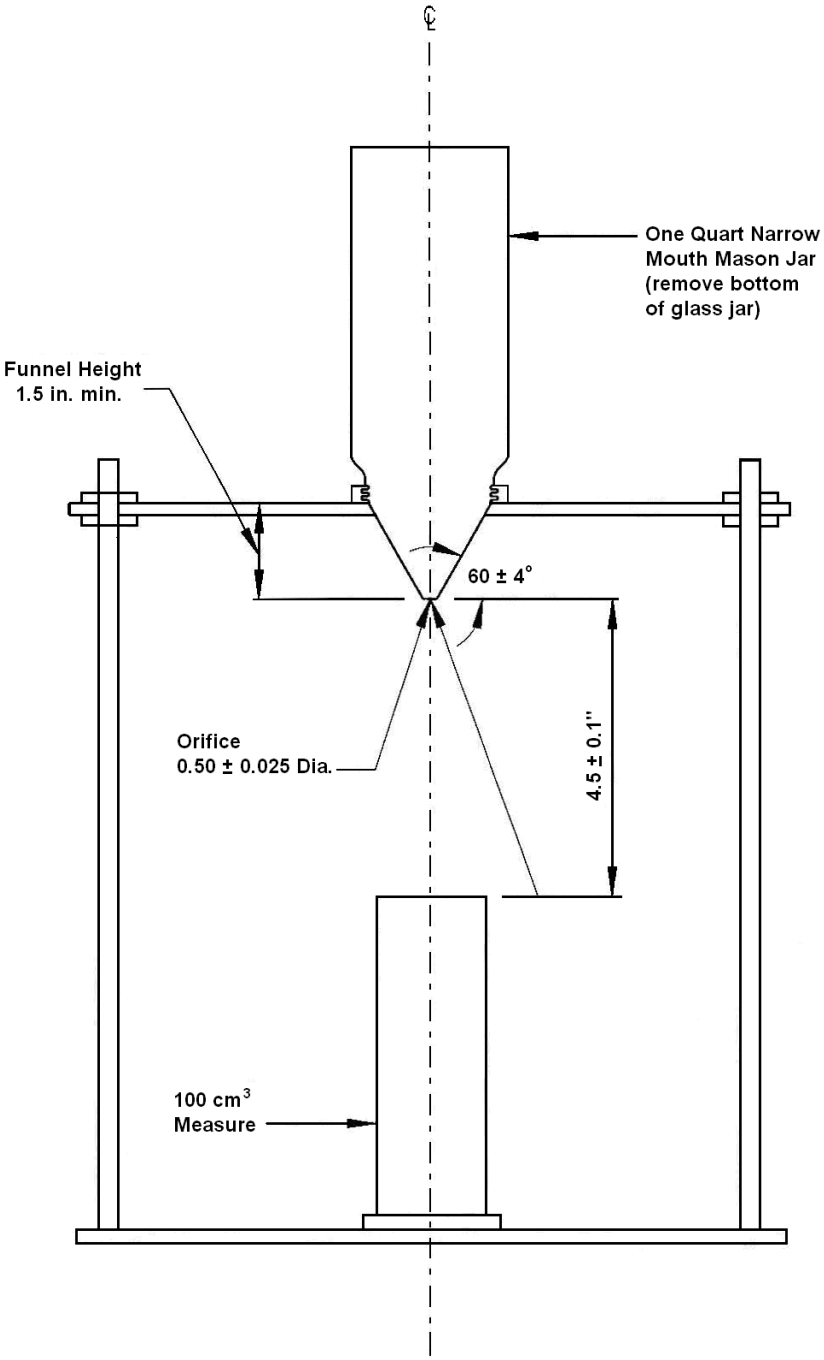

Section Through Center of Apparatus

FIGURE 1

MEASURE

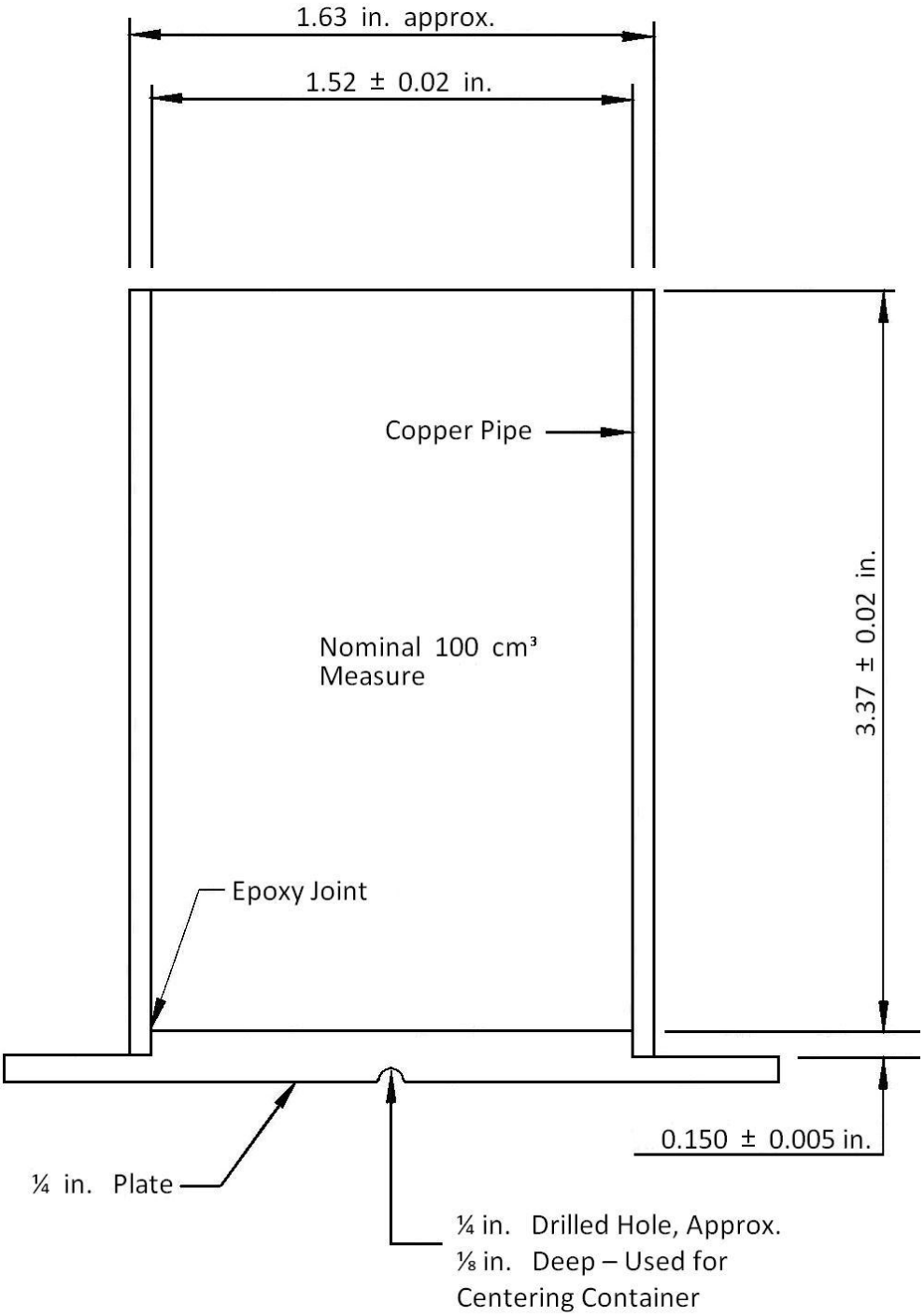

FIGURE 2

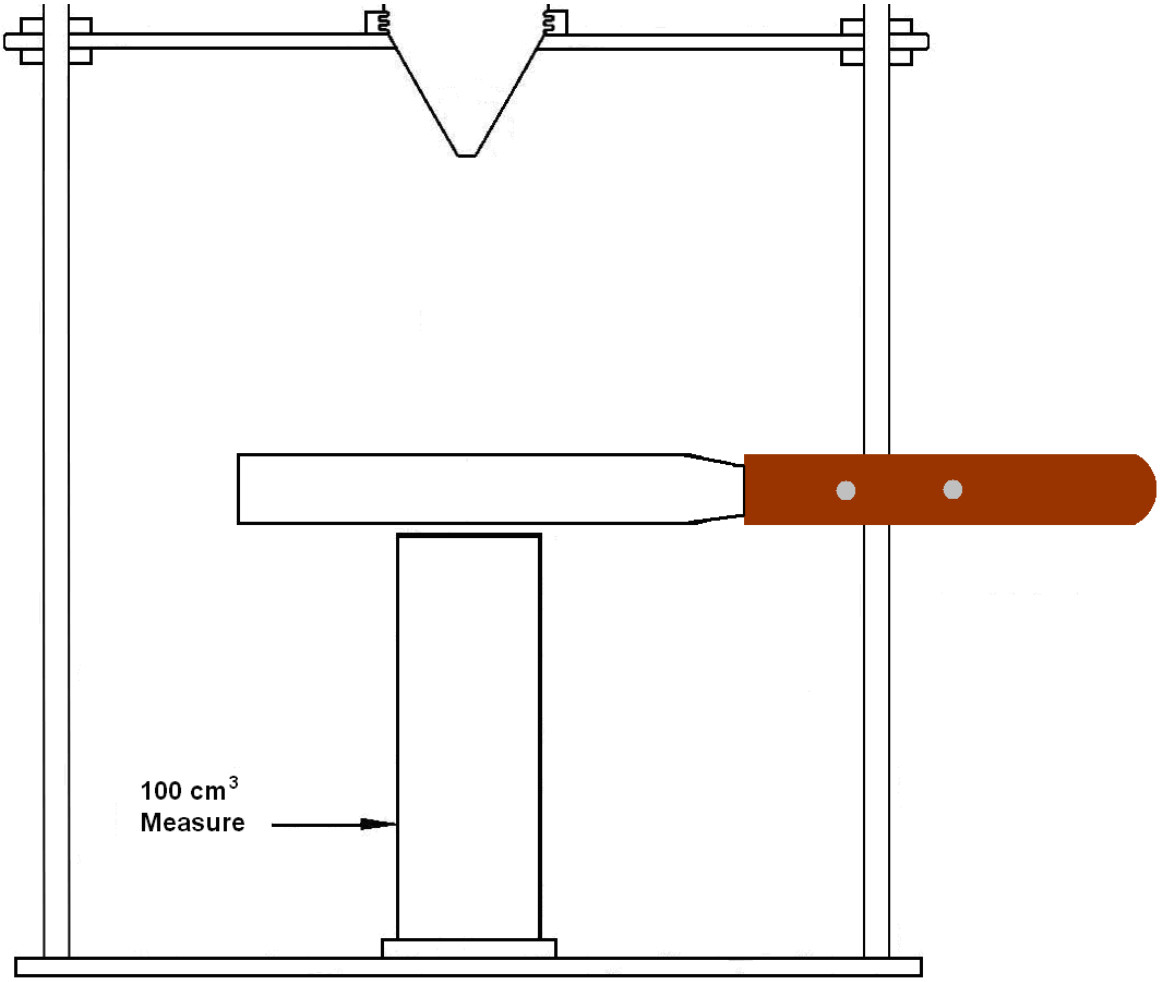
100 cm^3
Measure

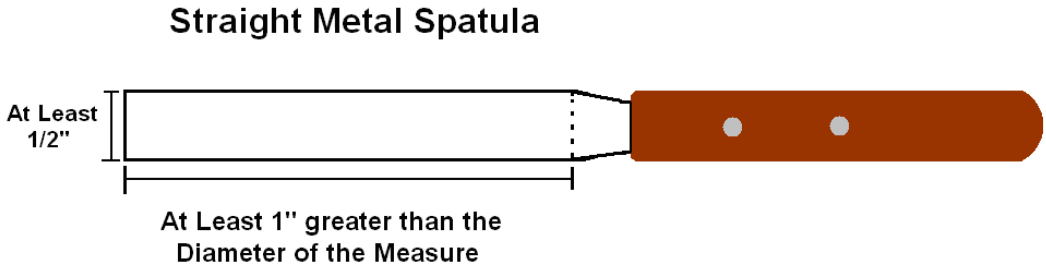
Straight Metal Spatula
At Least
1/2"
At Least 1" greater than the
Diameter of the Measure

FIGURE 3

MOISTURE CONTENT OF BITUMINOUS MIXTURES

(An Arizona Method)

1. SCOPE

1.1 This method is used to determine the percent moisture in bituminous mixtures. The option of using a conventional oven or a microwave oven is provided. In case of dispute, the conventional oven shall be utilized.

1.2 This test method may involve hazardous material, operations, and equipment. This test method does not purport to address all of the safety problems associated with its use. It is the responsibility of the user to consult and establish appropriate safety and health practices and determine the applicability of regulatory limitations prior to use.

2. APPARATUS

2.1 Requirements for the frequency of equipment calibration and verification are found in Appendix A3 of the Materials Testing Manual.

2.2 Suitable sample containers for use in testing with the conventional oven or microwave oven.

2.3 Oven - A thermostatically controlled oven capable of maintaining a temperature of 290 $\pm$ 10 °F; or, a microwave oven capable of variable heat intensity settings.

2.4 A balance or scale capable of measuring the maximum weight to be determined, accurate to at least 0.1 gram.

3. PROCEDURE (CONVENTIONAL OVEN)

3.1 Obtain a representative 1000 $\pm$ 50 gram sample in accordance with ARIZ 416.

3.2 Record the tare weight of the container to the nearest 0.1 gram.

3.3 Place sample in the container and weigh. Determine and record the wet weight of sample to the nearest 0.1 gram as "f".

3.4 Place container and sample in a 290 ± 10 °F oven and initially dry for a minimum of 1 hour. Weigh the container and sample. Record the weight to the nearest 0.1 gram.

3.5 Continue drying and weighing until a constant weight is obtained; being the weight at which further drying does not alter the weight more than 0.1 gram at intervals of a minimum of 30 minutes.

3.6 After constant weight is obtained, cover sample and allow to cool 30 + 10 minutes at room temperature. Weigh and determine and record the dry weight of sample to the nearest 0.1 gram as "g".

3.7 Proceed to section 5 for moisture content calculation.

4. PROCEDURE (MICROWAVE OVEN)

4.1 Obtain a representative 1000 ± 50 gram sample in accordance with ARIZ 416.

4.2 Record tare weight of the container to the nearest 0.1 gram.

4.3 Place sample in the container and weigh. Determine and record the wet weight of sample to the nearest 0.1 gram as "f".

4.4 Dry sample until a constant weight is obtained. The sample is considered to be at constant weight when further drying causes, or would cause, a difference in weight of not more than 0.1 gram. The sample shall be heated in such a manner that controls the intensity of heat generated to prevent splattering, aggregate breakage, and asphalt being "burned off". The method used with a microwave oven shall give results similiar to those achieved with a conventional oven.

4.5 After constant weight is obtained, cover sample and allow to cool 30 + 10 minutes at room temperature. Weigh and determine and record the dry weight of sample to the nearest 0.1 gram as "g".

5. CALCULATION

5.1 Calculate the percent moisture, "h", and record to the nearest 0.01% as shown below.

$$h = \frac{f - g}{f} \times 100$$

Where: h = Percent Moisture
f = Wet weight of sample
g = Dry weight of sample

COMPACTION AND TESTING OF BITUMINOUS MIXTURES UTILIZING FOUR INCH MARSHALL APPARATUS

(A Modification of AASHTO T 245)

1. SCOPE

1.1 This method covers the procedure for compacting and testing bituminous mixtures utilizing four inch Marshall apparatus.

1.2 This procedure is used for bituminous mixtures with a mix design gradation target of at least 85% passing the 3/4 inch sieve.

1.3 This test method may involve hazardous material, operations, or equipment. This test method does not purport to address all of the safety concerns associated with its use. It is the responsibility of the user to consult and establish appropriate safety and health practices and determine the applicability of any regulatory limitations prior to use.

1.4 See Appendix A1 of the Materials Testing Manual for information regarding the procedure to be used for rounding numbers to the required degree of accuracy.

2. APPARATUS

2.1 Requirements for the frequency of equipment calibration and verification are found in Appendix A3 of the Materials Testing Manual.

2.2 Compaction Mold Assembly 4 inch diameter cylindrical mold, baseplate, and extension collar constructed of steel and conforming to the requirements of Figure 1. (Three compaction mold assemblies are normally utilized.)

2.3 Specimen Extruding Device - Extrusion jack or press for extruding specimens from molds.

2.4 Compaction Hammer:

2.4.1 The compaction hammer shall either be a mechanical or hand compaction hammer having a flat, circular tamping face with a nominal diameter of (3-7/8 inches), and a (10 ± 1/4 pound) sliding weight with a free fall of (18 ± 1/2 inches).

2.4.2 Compaction hammers must be monitored through the ADOT proficiency sample program. To be qualified, compaction hammers must produce specimens with an average density of no greater than ± 1.0 lb./cu. ft. from the average bulk density for the most recent set of proficiency samples. If two samples are required for the proficiency samples, both of the bulk density sets must meet the ± 1.0 lb./cu. ft. criteria, if not, the hammer is not qualified.

2.4.3 As an alternate to qualifying a compaction hammer through the proficiency sample program, a compaction hammer may be qualified by correlating with a hammer which has been approved through comparison with proficiency sample results. When qualified in this manner, results must be no greater than ± 0.5 lb./cu. ft.

2.4.4 Hammers which have had adjustments or repairs made to them after being qualified, must be requalified by correlating with another qualified hammer and yield results within ± 0.5 lb./cu. ft.

Note: Marshall compaction equipment can go out of calibration at any time, and each laboratory is encouraged to establish a method of ensuring that their equipment remains in calibration. Alternate methods that can be used include regular comparisons with other approved hammers or compaction of samples which have a known density.

2.4.5 Hammers which do not meet the above requirements may be adjusted by modifying the weight, or the height of fall, within the given criteria; by adjusting the number of blows a maximum of ± 10 from the specified 75 blows; or by a combination of adjustments to weight, height of fall, or number of blows.

2.4.6 Should a compacton pedestal be moved or replaced, the compaction hammer(s) shall be requalified.

2.5 Compaction pedestal - The compaction pedestal shall consist of a 8" x 8" x 18" wooden post capped with a 12" x 12" x 1" steel plate. The steel cap shall be firmly fastened to the post. The wooden post shall have a dry weight of 42 to 48 lbs./cu. ft. and shall rest squarely on, and be firmly secured to, a solid concrete slab. The pedestal assembly shall be installed so that the post is plumb and the cap is level.

2.6 Specimen Mold Holder - Mounted on the compaction pedestal so as to center the compaction mold over the center of the post. It shall hold the compaction mold, collar, and base plate securely in position during compaction of specimen.

2.7 Oven for heating bituminous mixtures and specimen mold assemblies at required temperature.

2.8 Hot plate for heating compaction hammer, spoon and spatula.

2.9 A flat spatula with blade approximately 1 inch wide and at least 6 inches long, stiff enough to penetrate the entire bituminous mixture.

2.10 Calibrated/verified thermometers, for determining temperatures of bituminous mixtures, with a range of 50 to 400 °F and increments of not greater than 5 °F. For digital thermometers, increments shall not be greater than 1 °F.

2.11 A balance or scale capable of measuring the maximum weight to be determined and conforming to the requirements of AASHTO M 231, except the readability and sensitivity of any balance or scale utilized shall be at least one gram.

2.12 If Marshall stability and flow are to be determined, the following additional apparatus is required:

2.12.1 Breaking Head and Water Bath, conforming to the requirements specified in AASHTO T 245.

2.12.2 Marshall stability and flow testing apparatus, with operating instruction manual. The apparatus shall be capable of applying a load with a constant rate of travel of 2.0 $\pm$ 0.1 inches per minute.

2.12.3 Height gauge capable of measuring the height of specimens to the nearest 0.001 inch.

3. PROCEDURE

3.1 Obtain three representative samples for Marshall specimens, as described in Arizona Test Method 416. If the Combined Aggregate Bulk (O.D.) Specific Gravity is known, the weight calculated by the following equation (± 50 grams) will normally give specimens which meet the height requirement of 2.300 to 2.700 inches. (1150 ± 50 grams is generally adequate.)

$$\begin{bmatrix} \text{Weight of} \\ \text{each Sample} \end{bmatrix} = \frac{\begin{bmatrix} \text{Combined Aggregate} \\ \text{Bulk (O.D.) Specific Gravity} \end{bmatrix}}{2.520} \text{ x } 1150$$

3.2 Before placing the mixture in the mold, the mixture and a mold assembly (baseplate, mold, and collar) shall be at approximately 290 °F. The face of the compaction hammer shall be thoroughly cleaned and heated on a hot plate set at approximately 290 °F. The temperature of the laboratory during compaction of the specimens shall be between 68 and 86 °F.

3.3 Place a 4-inch paper disc in the bottom of the mold before the mixture is introduced. Place the entire batch in the mold in one lift. Care should be taken to avoid segregation of material in the mold. Spade the mixture vigorously, penetrating the entire mix, with the heated spatula 15 times around the perimeter and 10 times at random into the mixture. Smooth the surface of the mix to a slightly rounded shape.

3.4 The compaction temperature shall be the laboratory compaction temperature shown on the mix design.

3.5 If necessary, the mixture and mold assembly shall be returned to an oven at the required temperature for the minimum time necessary to achieve the laboratory compaction temperature ± 5 °F; however, in no case shall the mixture be reheated longer than 60 minutes.

3.6 Place a 4-inch paper disc on top of material, place the mold assembly on the compaction pedestal in the mold holder, and apply 75 blows [or adjusted number, as determined in Subsection 2.4] with the compaction hammer. When a hand hammer is utilized, the operator shall hold the handle by one hand so that the axis of the compaction hammer is as nearly perpendicular to the base of the mold assembly as possible while compaction is accomplished. Care shall be taken not to add body weight to the hammer by leaning or pressing down on the hammer. When using a hand hammer, no mechanical device of any kind is

to be used to restrict movement of the handle during compaction. Compaction shall be performed at a minimum rate of 40 blows per minute. The compaction hammer shall apply only one blow with each fall, that is, there shall not be a rebound impact. Remove the base plate and collar, and reverse and reassemble the mold. Apply 75 (or adjusted number) compaction blows to the face of the reversed specimen.

3.7 Remove collar, baseplate, and paper discs, and allow specimen to cool. Cooling may be accomplished at room temperature, in a 77 °F air bath, or if more rapid cooling is desired the mold and specimen may be placed in front of a fan until cool.

3.8 Extrude the specimen from the mold. Care shall be taken in extruding the specimen from the mold, so as not to develop tensile stresses in the specimen or tear the sides of the specimen.

4. SPECIMEN TESTING

4.1 If Marshall stability and flow are to be determined, measure height of specimens to the nearest 0.001 inch. Prior to measurement of height, excess material shall be brushed from the edges of the specimens. Compacted specimens shall be 2.300 to 2.700 inches in height. If this criteria is not met, the entire set of specimens shall be discarded and a new set prepared after necessary adjustments in sample weight have been made.

4.2 Determine the specific gravity of the specimens in accordance with Arizona Test Method 415, Method A. (Assume specimen is at constant weight after cooling.)

4.3 Determine the bulk density of each of the specimens, by multiplying the respective specific gravity by 62.3 lbs./cu. ft. Record the individual bulk densities to the nearest 0.1 lb./cu. ft. The densities of the three specimens shall not differ by more than 2.5 lbs./cu. ft. for 1/2", 3/4", or recycle mixes; and 3.0 lbs./cu. ft. for Base mixes. If this density requirement is not met, the entire set of specimens shall be discarded and a new set of specimens prepared.

4.4 Determine the average specific gravity of the specimens and record to the nearest 0.001. Calculate the average bulk density of the specimens, by multiplying the average specific gravity by 62.3 lbs./cu. ft. Record the average bulk density to the nearest 0.1 lb./cu. ft.

4.5 If the stability and flow are to be determined, the steps in Subsections 4.6 through 4.11 below are followed, utilizing the apparatus in accordance with the operating instructions for that apparatus.

4.6 Bring the specimens to 140 ± 2 °F by immersing in the water bath 30 to 40 minutes. Prior to testing, it shall be assured that the inside of the test heads are clean, and that the guide rods are clean and lubricated so that the upper test head slides freely over them.

4.7 The breaking head temperature shall be maintained between 70 to 100 °F, using a water bath when required. Remove the specimen from the water bath, quickly towel dry specimen and place in the lower segment of the breaking head. Place the upper segment of the breaking head on the specimen, and place the complete assembly in position on the testing machine.

4.8 Apply the load to the specimen with a constant rate of 2.0 ± 0.1 inches per minute until the maximum load is reached and the load decreases. The maximum load is defined as the last point in the load/time curve before the load decreases. The elapsed time for the test from removal of the test specimen from water bath to maximum load determination shall not exceed 30 seconds.

4.9 Record the stability of each specimen to the nearest 10 pounds force, and the flow to the nearest 0.01 inch.

4.10 Correct the stability obtained for each specimen, for the height of the specimen, by the table in Figure 2. Record the corrected stability to the nearest 10 pounds force.

4.11 Determine and record the average corrected stability to the nearest 10 pounds force, and the average flow to the nearest 0.01 inch.

LEGEND

A: 4-3/4 in.
B: 9/16 in.
C: 3-63/64 in.
D: 1/8 to 9/32 in.
E: 4-1/2 in.
F: 3/16 in.
G: 4-1/8 in.
H: 3-7/16 in.
I: 1/4 in.
J: 2-3/4 in.
K: 4-5/32 in.
L: 4-9/32 in.
M: 4-19/64 in.
N: 9/32 in.
O: 20 degrees
P: 3.990 to 4.010 in.

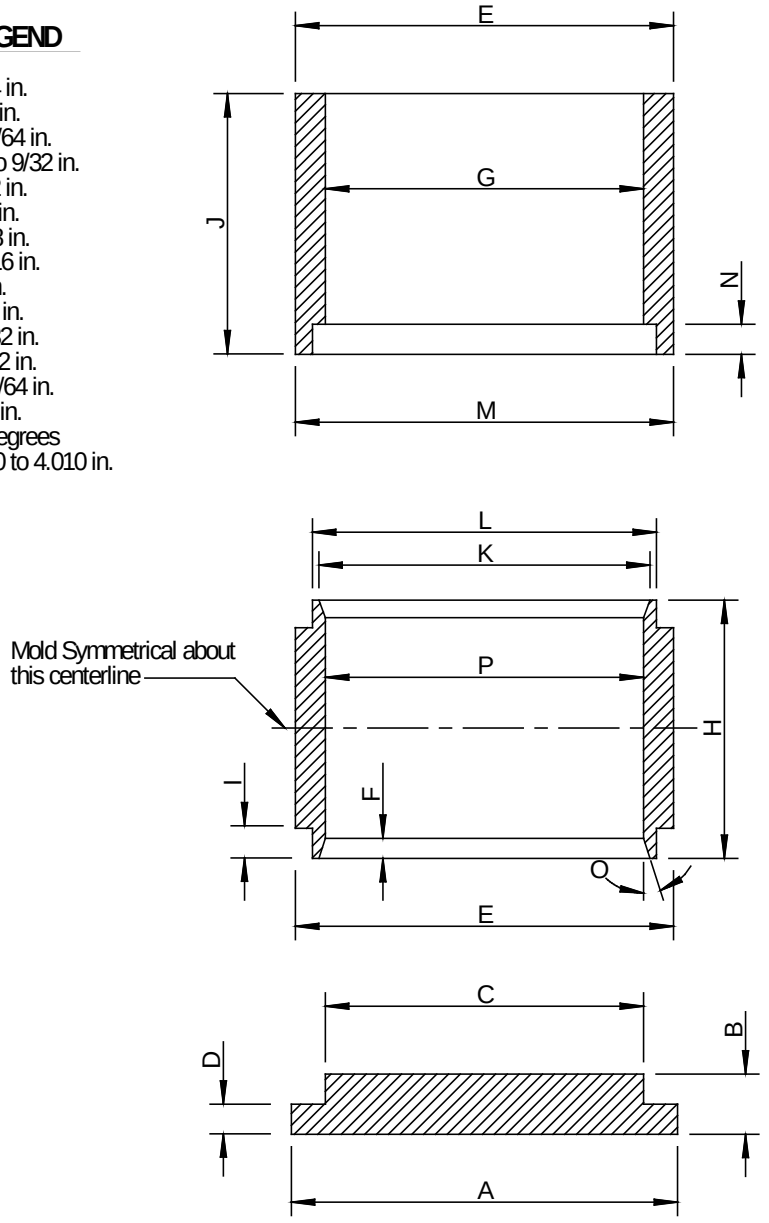

All dimensions are nominal, except where tolerances are indicated.

Four Inch Compaction Mold, Extension Collar, and Baseplate

FIGURE 1

STABILITY CORRELATION RATIOS*

For 4 inch Diameter Specimens

Height of Specimen (Inches)	Correlation Ratio
2.300 - 2.306	1.15
2.307 - 2.319	1.14
2.320 - 2.332	1.13
2.333 - 2.344	1.12
2.345 - 2.357	1.11
2.358 - 2.369	1.10
2.370 - 2.381	1.09
2.382 - 2.393	1.08
2.394 - 2.405	1.07
2.406 - 2.417	1.06
2.418 - 2.430	1.05
2.431 - 2.445	1.04
2.446 - 2.461	1.03
2.462 - 2.477	1.02
2.478 - 2.492	1.01
2.493 - 2.507	1.00
2.508 - 2.522	0.99
2.523 - 2.537	0.98
2.538 - 2.553	0.97
2.554 - 2.573	0.96
2.574 - 2.594	0.95
2.595 - 2.615	0.94
2.616 - 2.634	0.93
2.635 - 2.649	0.92
2.650 - 2.663	0.91
2.664 - 2.679	0.90
2.680 - 2.697	0.89
2.698 - 2.700	0.88

* The measured stability of a specimen multiplied by the correlation ratio for the height of the specimen equals the corrected stability for a 2-1/2 inch specimen.

FIGURE 2

PREPARING AND SPLITTING FIELD SAMPLES OF BITUMINOUS MIXTURES FOR TESTING

(An Arizona Method)

1. SCOPE

1.1 This procedure describes the preparation and splitting of field samples of bituminous mixtures for testing.

1.2 This test method may involve hazardous material, operations, or equipment. This test method does not purport to address all of the safety concerns associated with its use. It is the responsibility of the user consult and establish appropriate safety and health practices and determine the applicability of regulatory limitations prior to use.

2. APPARATUS

2.1 Requirements for the frequency of equipment calibration and verification are found in Appendix A3 of the Materials Testing Manual.

2.2 A balance or scale capable of measuring the maximum weight to be determined and conforming to the requirements of AASHTO M 231, except the readability and sensitivity of any balance or scale utilized shall be at least 0.1 gram.

2.3 Oven capable of maintaining a temperature of 290 $\pm$ 10 °F.

2.4 Closed-end samplers as illustrated in Figure 1 (or similiar), constructed of 16 to 18 gauge sheet metal, having a height of 3 inches, a minimum length of 13 inches, and widths of approximately 2-1/2 inches, 3 inches, or 3-1/2 inches.

2.5 A concrete trowel or hand float. If desired, a straightedge of sufficient length to span the final diameter of the circular mass may be used.

2.6 Small scoop, spatulas, and suitable size containers.

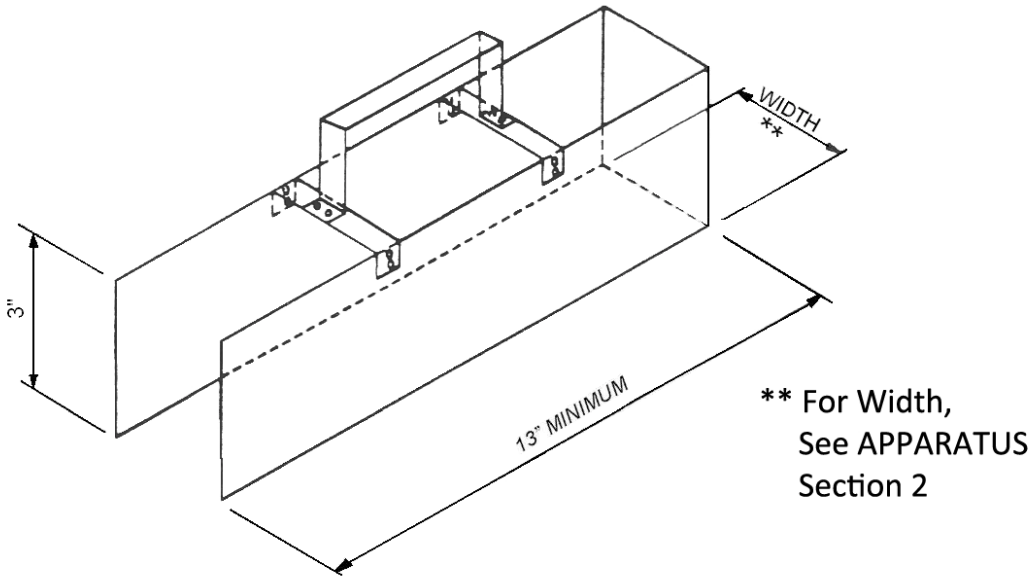

FIGURE 1

3. PREPARATION OF SAMPLE

3.1 Samples may be stored for indefinite periods of time at temperatures not exceeding 140 °F.

3.2 The material shall be easily workable and pliable when splitting. If necessary, the sample may be heated at 290 ± 10 °F for a maximum of 3 hours. The 3-hour time period begins when the oven reaches the specified temperature.

3.3 If necessary, the material shall be reduced in size to provide a workable amount of material from which to obtain all required samples by thoroughly mixing and quartering, splitting with a mechanical (clam-shell) splitter, or using a four-way splitter such as a "Quartermaster". When utilizing a mechanical (clam-shell) splitter, the width of the individual chute openings shall be approximately 1-1/2 to 2-1/2 times larger than the largest particles in the sample to be split. Generally it will only be necessary to reduce the material one time by quartering or splitting. A light coat of vegetable cooking spray may be sprayed on the equipment to help shed the asphaltic concrete. In no case shall diesel fuel or similar solvent be used. Individual samples for testing shall not be obtained by quartering or splitting, but rather as described in Section 4.

3.4 Place the hot material on a tarp or a sheet of heavy paper large enough to manipulate the sample. In a rolling motion thoroughly mix the material. Leave the mound in a circular shape after rolling is completed.

3.5 Spread the material into a circular mass. Spreading may be accomplished either by leveling the mound of material with a concrete trowel or hand float; or by placing a straightedge of sufficient length to span the final diameter of the circular mass over the center of the material and rotating it until the desired height is obtained. Whichever method is utilized, the operator shall assure that the material is evenly distributed with as little segregation as possible. The thickness of the circular mass shall not exceed 3 inches. Generally a depth of 1-1/2 to 2 inches will provide acceptable size samples.

3.6 At any time during obtaining test samples, the material may be reheated for a maximum of 1 hour at a temperature not exceeding 300 °F to restore pliability.

4. OBTAINING TEST SAMPLES

4.1 The required samples for testing, with the exception of moisture content, shall be obtained as described in Subsections 4.2 through 4.6 below. For obtaining test samples for moisture content, see Subsection 4.7 below. The samples may be obtained in any sequence as long as the sample for moisture content is taken immediately before or after the sample for determination of asphalt content. The width of sampler to be used is dependent upon the size of aggregate in the sample and/or the amount of material needed.

4.2 The samples shall be obtained by placing the closed end of the sampler as near the center of the mass as possible with the open end of the sampler extending beyond the edge of the circular mass (see Figure 2). Force the sampler down to the bottom of the pile and remove the contents that are captured by sliding the sampler out of the pile, and placing the contents into a tared container.

4.3 Obtain additional material, as necessary, by repeating the procedure in Subsection 4.2, at a different location in the pile so that a cut does not overlap a previous cut (see Figure 3).

4.4 If small amounts of material are needed, slide the sampler out and to the side of the pile. Lift the sampler up and turn it perpendicular to the material. Force the sampler down through the full width of the material, starting at the closed end portion of the material. (Figure 4 provides an illustration of this procedure.) If necessary, additional material may be obtained by taking multiple cuts. Utilize the entire portion(s) taken and do not attempt to obtain an exact weight.

4.5 If excess material is obtained, the sample shall be returned to a place not disturbing the rest of the circular mass. If the remaining mass is large enough, and is undisturbed, obtain another sample for the test, if necessary utilizing a smaller width sampler. Alternatively, the sample may be returned to the circular mass and the material re-rolled and spread to a thinner depth.

4.6 If the remaining mass is not large or uniform enough to obtain required samples, re-roll and spread the material in the same manner described in Subsection 3.5.

4.7 Test samples for determining moisture content may be obtained by use of the sampler as described in Subsections 4.2 through 4.6 above, or by taking several small portions with a small scoop at random locations throughout the mass.

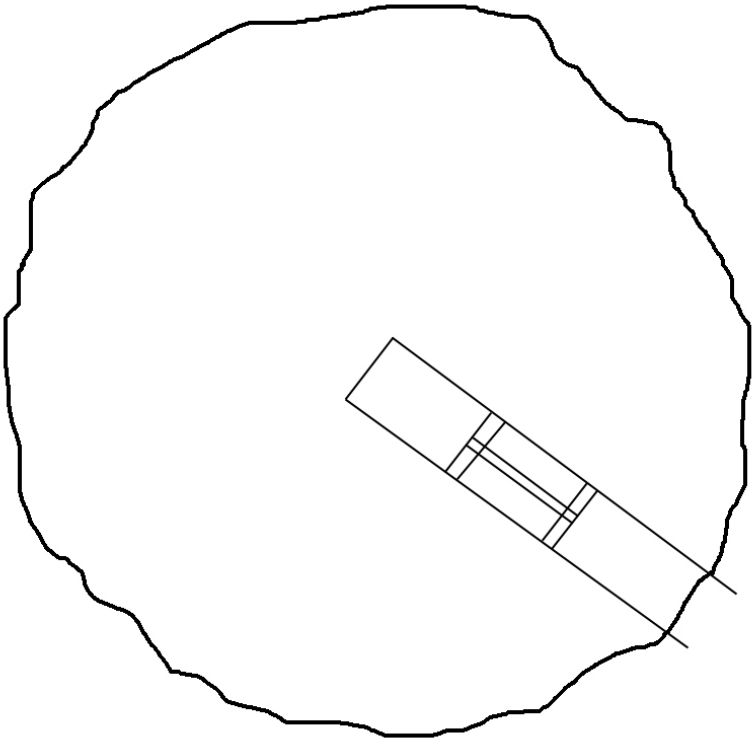

FIGURE 2

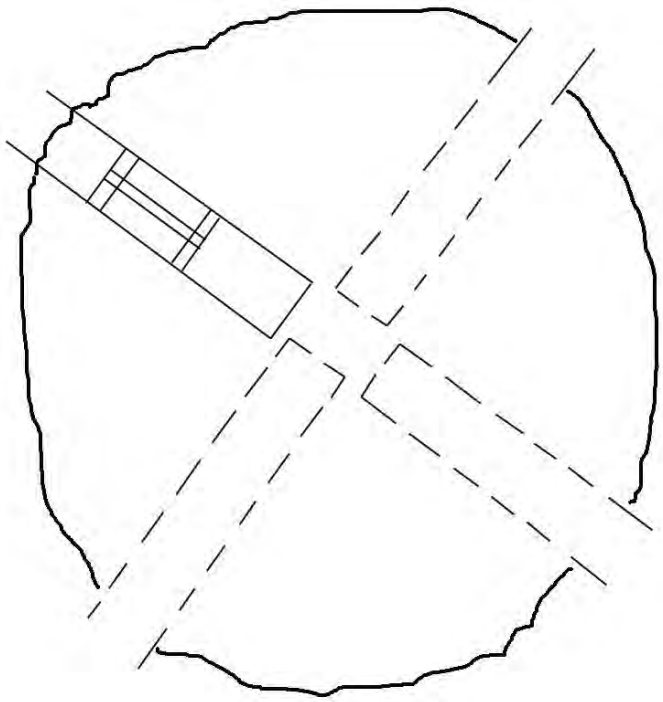

FIGURE 3

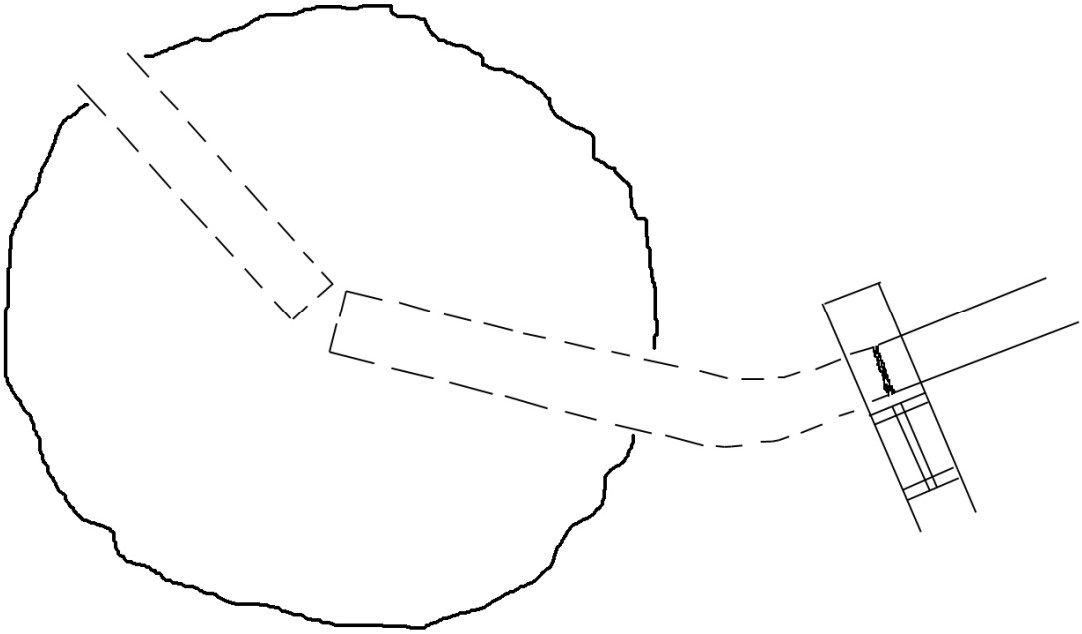

FIGURE 4

MAXIMUM THEORETICAL SPECIFIC GRAVITY AND DENSITY OF FIELD PRODUCED BITUMINOUS MIXTURES (RICE TEST)

(A Modification of AASHTO T 209)

1. SCOPE

1.1 This method of test is intended for determining the maximum specific gravity and density of uncompacted bituminous mixtures that have been field produced.

Note: Two methods are provided for determining the maximum specific gravity. The method given in Section 6 is for determining results without fan drying the samples. Section 7 describes the procedure which is used when fan drying is necessary. For the first four samples taken at the beginning of production on a project the maximum specific gravity shall be determined in accordance with Section 6 and also shall be fan dried and maximum specific gravity determined in accordance with Section 7. If the difference in resultant air voids, when determined as described in Arizona Test Method 424 is greater than 0.2% subsequent samples will be subjected to fan drying. During the course of the project comparisons should be made on approximate 10 sample intervals to determine need for fan drying. In case of dispute, fan drying shall be used.

1.2 This test method may involve hazardous material, operations, or equipment. This test method does not purport to address all of the safety concerns associated with its use. It is the responsibility of the user to consult and establish appropriate safety and health practices and determine the applicability of any regulatory limitations prior to use.

1.3 See Appendix A1 of the Materials Testing Manual for information regarding the procedure to be used for rounding numbers to the required degree of accuracy.

2. APPARATUS

2.1 Requirements for the frequency of equipment calibration and verification are found in Appendix A3 of the Materials Testing Manual.

2.2 Balance - A balance capable of measuring the maximum weight to be determined and conforming to the requirements of AASHTO M 231, except the readability and sensitivity of any balance utilized shall be at least 0.1 gram.

2.3 Container - A heavy walled Erlenmeyer flask having a capacity of at least 1500 mL and strong enough to withstand a partial vacuum; the cover shall consist of a rubber stopper with a tight hose connection. A small piece of No. 200 wire mesh covering the hose opening shall be used to minimize the possibility of loss of fine material.

Note: If a procedure which subjects multiple flasks to a vacuum simultaneously is used, the vacuum gauge shall be placed beyond the last bottle to insure that all the bottles are being subjected to the same amount of vacuum.

2.4 Flat glass plate large enough to cover mouth of the flask.

2.5 Vacuum pump for evacuating air from the container.

2.6 All water used in this procedure shall be distilled or de-mineralized water.

3. CALIBRATION OF FLASK

3.1 Record the weight of the flask and flat glass plate separately to the nearest 0.1 gram on the work card. Using water at a temperature of 77 ± 1 °F, fill the flask with water to approximately one inch below the top of the flask. Using a long narrow rod, remove air bubbles adhering to the walls of the flask. Confirm that the temperature of the water is at 77 ± 1 °F. Fill to the top and slide the flat glass plate over the mouth of the flask. Verify that no air is trapped under the flat glass plate. Dry the outside of the flask and glass plate and weight to the nearest 0.1 gram. Subtract the weight of the glass plate and record the weight of the “flask and water” as "B".

4. PREPARATION OF SAMPLES

4.1 Obtain 3 representative 1050 ± 50 gram samples of the material, as described in Arizona Test Method 416.

Note: If necessary, heat the sample for not more than one hour at a maximum temperature of 285 °F ONLY until it is pliable enough to allow separation of the coated aggregate.

4.2 Spread each sample on a sheet of heavy paper or in a large flat bottom pan. Before the samples are completely cooled, separate the particles of the mixture, taking care not to fracture the coarse aggregate particles, so that the particles of the fine aggregate portion are not larger than 1/4 inch. Allow the samples to cool to room temperature.

5. PROCEDURE

5.1 Place the sample in the flask and determine the weight to the nearest 0.1 gram. Subtract the weight of the flask and record the “weight of sample in air" as "Wmm".

5.2 Add sufficient water to cover the sample. The water shall be at a temperature of approximately 77 °F and shall have been treated with a wetting agent.

Note: Aerosol OT in a concentration of 0.01%, or one mL of 10% solution per 1000 mL of water, has been found to be a suitable wetting agent and shall be used to facilitate the release of entrapped air.

5.3 Remove entrapped air by subjecting the contents of the flask to a partial vacuum with a minimum of 20 inches of mercury (gauge) for 15 ± 2 minutes, agitating the contents of the flask four times at evenly spaced intervals throughout this period.

CAUTION: Do not agitate the sample too frequently or vigorously, as that can cause stripping of the asphalt film from some particles, resulting in erroneous specific gravities.

5.4 After the evacuation period, fill the flask with water to approximately one inch below the top of the flask. Gently stir the sample with a long narrow rod in such

a way to release any trapped air bubbles, avoiding breakage of the aggregates. Using the long narrow rod, carefully remove any air bubbles adhering to the walls of the flask. Fill completely to the top and confirm that the temperature is at 77 ± 2 °F. Slide the pre-weighed flat glass plate over the mouth of the flask. Verify that no air is trapped under the flat glass plate. Dry the outside of the flask and glass plate and weigh immediately to the nearest 0.1 gram. Subtract the weight of the glass plate and record the weight of the "flask + water + sample" as "C".

6. CALCULATIONS

6.1 The Volume of Voidless Mix, "Vvm", in mL, is determined for each sample by the following:

$$Vvm = Wmm + B - C$$

$$Gmm = \frac{Wmm}{Vvm}$$

Where: Wmm = Wt. of Sample in Air
B = Wt. of Flask + Water + Glass Plate
C = Wt. of Flask + Water + Sample + Glass Plate

6.2 Compare the three individual values for maximum specific gravity. If the range of the three is within 0.024, all are used to determine the average maximum specific gravity as shown in Subsection 6.4. If the range is greater than 0.024, the average of two may be used if they are within a range of 0.012. If values are not achieved within the above criteria, the samples shall be discarded and a set of three new samples shall be tested. If material is not available, results should be used cautiously in the analysis of the bituminous mix. If results are used for specification compliance, additional material must be obtained for retesting.

6.3 The average maximum specific gravity of the bituminous mix is determined for the samples with acceptable maximum specific gravity values, and recorded to the nearest 0.001.

6.4 To determine the maximum density, the average maximum specific gravity is multiplied by 62.3 lbs./cu. ft.

7. PROCEDURE FOR FAN DRYING SAMPLES

7.1 The entire contents of the flask shall be poured into a nest of sieves consisting of a No. 40 and a No. 200 screen.

Note: If stripping has occurred, as evidenced by discoloration of water in the flask, significant loss of Minus No. 200 material may be expected. Provisions for the recovery and addition of this material to the Plus No. 200 material shall be made.

7.2 Allow the mix to drain through the sieves until excess moisture is removed from the mix. Separate the sieves and place both sieves in a tared pan. Place the pan in front of a fan (see Note below) and dry the material retained on the No. 40 and No. 200 sieves until the material can be easily removed from the sieves. Remove the material from the sieves and spread it in the pan. Determine and record the initial weight of the pan and the material.

Note: The air through the fan shall be at room temperature and no heat shall be used to dry the material.

7.3 Continue fan drying the material, determining and recording the weight of the pan and the material at 15 minute intervals. When the weight loss is 0.5 gram or less for a 15 minute interval, the mix is considered to be surface dry. Record the surface dry weight as "Wsd". Intermittent stirring of the sample is required during the drying period. Conglomerations of the mix shall be broken by hand. Care must be taken to prevent loss of particles of the mixture.

Note: If the "Wsd" weight for any of the three samples is less than its corresponding "Wmm" weight, the samples shall be discarded and a set of three new samples shall be tested. If material is not available, the maximum specific gravity shall be determined utilizing the "Wmm" weight and results should be used cautiously in the analysis of the bituminous mix. If results are used for specification compliance, additional material must be obtained for retesting.

7.4 To calculate the fan dried "Vvm" and maximum specific gravity, "Gmm", of each sample, the surface dry weight, "Wsd", is substituted for "Wmm" in the equation given for "Vvm" in Subsection 6.1, as shown in the example below.

$$Vvm = Wsd + B - C$$

$$G_{mm} = \frac{W_{mm}}{V_{vm}}$$

Where:

Wmm	=	Wt. of Sample in Air
Wsd	=	Wt of Fan Dried Sample
B	=	Wt. of Flask + Water + Glass Plate
C	=	Wt. of Flask + Water + Sample + Glass Plate

8. EXAMPLE

8.1 An example of the completed form is shown in Figure 1 and an example of the blank form is shown in Figure 2.

ADOT Intermodal Transportation

Arizona Department of Transportation
ARIZONA TEST METHOD 417

Lab#: 15-3456 Date: 08/05/2015 Project #: F-111-1(1) TRACS#: H999901C
Project Name: Big Gulch - Bug Mountain Material Type: 3/4" AC
Lot#: 1 Sample #: 4 Maximum Specific Gravity Range: 0.003
Tested By: Lisa Tester Checked By: A. A.

If samples were fan dried, the maximum density is determined utilizing the "Wsd" weight as shown below:

Flask Number or I. D.	"Wf" Wt. of Flask	"Wmm" Wt. of Sample in Air Wfs - Wf	"B" Wt. of Flask + Water	"C" Wt. of Flask + Sample + Water Wa - Wp	Vvm" Volume of Voidless Mix Wmm + B - C	"Gmm" Maximum Specific Gravity Wmm / Vvm	Maximum Density (lbs./cu. ft.) Gmm X 62.3	"Wsd" Surface Dry Weight (See Below)	Vvm" Volume of Voidless Mix Wsd + B - C	"Gmm" Maximum Specific Gravity Wmm / Vvm	Maximum Density (lbs./cu. ft.) Gmm X 62.3
1	998.7	1064.9	3215.7	3848.7	431.9	2.466		1067.7	434.7	2.450	
2	977.6	1076.5	3178.7	3819.2	436.0	2.469		1080.5	440.0	2.447	
3	~~994.3~~	~~1067.4~~	~~3194.1~~	~~3825.1~~	~~436.4~~	~~2.446~~		~~1071.2~~	~~440.2~~	~~2.425~~	
AVERAGE						*2.468*	*153.8*			*2.449*	*152.6*

Remarks: *Flask #3 eliminated from the average due to Specific Gravity being outside specified 0.024 allowable range*

Flask Number or I. D.	1	2	3
Wt. of Flask + Sample, "Wfs"	2063.6	2054.1	2061.7
Wt. of Flask + Sample Water + Glass Plate, "Wa"	3931.1	3901.6	3907.5
Wt. of Glass Plate, "Wp"	82.4	82.4	82.4

Specific Gravity Range:	Range of 3:	Range of 2:
Non Fan Dried:	0.020	0.003
Fan Dried:	0.025	0.003

Maximum Specific Gravity (Rice) Fan Dry Weigh backs

Flask Numer or I.D.	1	2	3
Tare weight of Pan	453.7	502.4	499.6
Weight of Pan and Sample	1536.3	1597.8	1585.7
Weight of Pan and Sample	1529.2	1590.7	1578.6
Weight of Pan and Sample	1523.2	1584.7	1572.6
Weight of Pan and Sample	1522.5	1584.0	1571.9
Weight of Pan and Sample	1521.9	1583.4	1571.2
Weight of Pan and Sample	1521.4	1582.9	1570.8
Weight of Pan and Sample			
Weight of Pan and Sample			
Surface Dry Weight (Wsd)	*1067.7*	*1080.5*	*1071.2*

Air Voids Calculations

$$\left[1 - \frac{\text{A.C.Mix Bulk Density}}{\text{Maximum Density From Rice Test}}\right] \times 100 =$$

Non Fan Dried $\left[1 - \frac{145.5}{153.8}\right] \times 100 =$ 5.4 %

Fan Dried $\left[1 - \frac{145.5}{152.6}\right] \times 100 =$ 4.6 %

Difference in Air Voids = [Air Voids (Sample Not Fan Dried)] - [Air Voids (Sample Fan Dried)] = 0.8 %

44-3941 R12/15

FIGURE 1

ADOT Intermodal Transportation

Arizona Department of Transportation
ARIZONA TEST METHOD 417

Lab#: _____ Date: _____ Project #: _____ TRACS#: _____
Project Name: _____ Material Type: _____
Lot#: _____ Sample #: _____ Maximum Specific Gravity Range: _____
Tested By: _____ Checked By: _____

If samples were fan dried, the maximum density is determined utilizing the "Wsd" weight as shown below:

Flask Number or I. D.	"Wf" Wt. of Flask	"Wmm" Wt. of Sample in Air Wfs - Wf	"B" Wt. of Flask + Water	"C" Wt. of Flask + Sample + Water Wa - Wp	Vvm" Volume of Voidless Mix Wmm + B - C	"Gmm" Maximum Specific Gravity Wmm / Vvm	Maximum Density (lbs./cu. ft.) Gmm X 62.3	"Wsd" Surface Dry Weight (See Below)	Vvm" Volume of Voidless Mix Wsd + B - C	"Gmm" Maximum Specific Gravity Wmm / Vvm	Maximum Density (lbs./cu. ft.) Gmm X 62.3
AVERAGE											

Flask Number or I. D.			
Wt. of Flask + Sample, "Wfs"			
Wt. of Flask + Sample Water + Glass Plate, "Wa"			
Wt. of Glass Plate, "Wp"			

Remarks:

Specific Gravity Range: Range of 3: Range of 2:

Non Fan Dried:

Fan Dried:

Maximum Specific Gravity (Rice) Fan Dry Weigh backs

Flask Numer or I.D.			
Tare weight of Pan			
Weight of Pan and Sample			
Weight of Pan and Sample			
Weight of Pan and Sample			
Weight of Pan and Sample			
Weight of Pan and Sample			
Weight of Pan and Sample			
Weight of Pan and Sample			
Surface Dry Weight (Wsd)			

Air Voids Calculations

$$1 - \frac{\text{A.C.Mix Bulk Density}}{\text{Maximum Density From Rice Test}} \times 100 =$$

Non Fan Dried [1 - _____] x 100 = _____ %

Fan Dried [1 - _____] x 100 = _____ %

Difference in Air Voids = [Air Voids (Sample Not Fan Dried)] - [Air Voids (Sample Fan Dried)] = _____ %

44-3941 R12/15

FIGURE 2

RESIDUE BY EVAPORATION

(An Arizona Method)

1. SCOPE

1.1 This method describes a rapid procedure for determining the percent of asphaltic residue in all types of emulsified bituminous materials.

1.2 This test method may involve hazardous material, operations, or equipment. This test method does not purport to address all of the safety concerns associated with its use. It is the responsibility of the user to consult and establish appropriate safety and health practices and determine the applicability of any regulatory limitations prior to use.

1.3 See Appendix A1 of the Materials Testing Manual for information regarding the procedure to be used for rounding numbers to the required degree of accuracy.

1.4 Metric (SI) units and values are shown in this test method with English units and values following in parentheses. Values given for metric and English units may be numerically equivalent (soft converted) for the associated units, or they may be given as rounded or rationalized values (hard converted). Either the metric or English units along with their corresponding values shall be used in accordance with applicable specifications. See Appendix A2 of the Materials Testing Manual for additional information on the metric system.

2. APPARATUS

2.1 Requirements for the frequency of equipment calibration and verification are found in Appendix A3 of the Materials Testing Manual.

2.2 Small glass beaker or similar container.

2.3 Ointment tins [180 mL (6 oz.)].

2.4 Hot plate capable of maintaining temperatures of 163 °C (325 °F) maximum.

2.5 Glass or metal stirring rod.

2.6 A balance or scale capable of measuring the maximum weight to be determined and conforming to the requirements of AASHTO M 231, except the readability and sensitivity of any balance or scale utilized shall be at least 0.01 gram.

3. PRECAUTION

3.1 Care must be exercised in the use of apparatus and the handling of the tin so that material is neither lost nor additional material picked up. The use of the ointment tin lid serves as well as a clean place for resting the tin.

4. PROCEDURE

4.1 Thoroughly mix the sample using stirring rod.

Note: It is very important that the sample be completely mixed, making certain to mix material clinging to bottom and sides of container into sample. A sample that has "separated" may be rendered homogeneous through continued stirring. Never mix the sample by shaking. If a sample is received which has "broken", it shall be discarded and another sample obtained for testing.

4.2 Pour approximately 25 grams of the mixed material into the glass beaker or similar container.

4.3 Record weight of a 180 mL (6 oz.) ointment tin to the nearest 0.01 gram and place 5 $\pm$ 0.3 grams of material into the tin. Record weight of material in tin to the nearest 0.01 gram, as "A".

4.4 Repeat procedure in Subsection 4.3 for 2 additional samples.

4.5 Place the three samples on hot plate and slowly heat to a temperature that will prevent spattering or overcooking. (See Note in Subsection 4.7)

4.6 Heat samples at this temperature until the residue stops bubbling and appears smooth. This is an indication that the sample is nearing the end point (complete removal of water).

Note: Air bubbles should be removed occasionally by tapping tin on the hot plate or other hard surface and rotating the sample around the bottom of the tin. (Use of tongs or needle-nose pliers to handle tin is recommended.)

4.7 Raise the temperature of samples to 163 °C (325 °F) maximum. This may be accomplished by raising the temperature of the hot plate or by placing samples on another hot plate. If an additional hot plate is used and bubbling occurs the samples shall be placed back on the lower temperature hot plate for a short period of time and then returned to the higher temperature hot plate.

Note: The temperatures required vary with the type of material being tested. When testing the "ERA" grade materials and emulsions with low viscosities the temperatures used will normally be near the boiling point of water. When testing higher viscosity materials the temperatures may approach the 163 °C (325 °F) maximum allowed. Care must be exercised for all materials to prevent spattering and overheating.

4.8 Heat the samples until the first indication of smoking is detected, which shall be the determination of the removal of all water. The use of a black background is useful in observing the point of smoking.

Note: When testing "ERA - 1" grade materials, the determination of end point described in Subsection 4.8 shall not be used, rather when the material is free of all bubbles and has a completely translucent appearance.

4.9 Remove samples from hot plate and allow to cool.

4.10 Record the weight of each sample to the nearest 0.01 gram, as "B".

5. CALCULATION

5.1 Determine percent residue of each sample by the equation below, and record results to the nearest 0.1%:

$$\text{Percent Residue} = \frac{B}{A} \times 100$$

Where: A = Weight of Sample Before Heating
B = Weight of Sample After Heating

Example:

$$\%\,\text{Residue} = \frac{3.18}{5.02} \times 100 = 63.35\%$$

5.2 Determine the average percent residue of the material being tested by the equation below, and record the results to the nearest 0.1%.

$$\text{Average}\,\%\,\text{Residue} = \frac{(\text{Sum of the 3 individual samples Percent Residue})}{3}$$

Example:

(For 3 samples of 63.4 %, 63.5%, and 63.7% residue)

$$\text{Average}\,\%\,\text{Residue} = \frac{(63.4 + 63.5 + 63.7)}{3} = 63.5\%$$

Reported Example = 64%

6. REPORT

6.1 The average percent residue shall be reported to the nearest whole percent.

ROUNDING PROCEDURE

The following describes the rounding procedure which is to be used for rounding numbers to the required degree of accuracy:

1. Except as specified in Section 2 below, the following procedure will apply. This procedure correlates with the "built-in" rounding method normally utilized by calculators and computers.

1.1 When the figure next beyond the last figure or place to be retained is less than 5, the figure in the last place retained is left unchanged.

Examples:
Rounding 2.6324 to the nearest thousandth is 2.632
Rounding 7843.343 to the nearest hundredth is 7843.34
Rounding 4928.22 to the nearest tenth is 4928.2
Rounding 7293.1 to the nearest whole number is 7293
Rounding 2042 to the nearest units of 10 is 2040
Rounding 3548 to the nearest units of 100 is 3500
Rounding 8436 to the nearest units of 1000 is 8000

1.2 When the figure next beyond the last figure or place to be retained is 5 or larger, the figure in the last place retained is increased by 1.

Examples:
Rounding 4839.4575 to the nearest thousandth is 4839.458
Rounding 9347.215 to the nearest hundredth is 9347.22
Rounding 8420.35 to the nearest tenth is 8420.4
Rounding 1728.5 to the nearest whole number is 1729
Rounding 3685 to the nearest units of 10 is 3690
Rounding 6650 to the nearest units of 100 is 6700
Rounding 2500 to the nearest units of 1000 is 3000

Rounding 2.6326 to the nearest thousandth is 2.633
Rounding 7843.347 to the nearest hundredth is 7843.35
Rounding 4928.28 to the nearest tenth is 4928.3
Rounding 7293.9 to the nearest whole number is 7294
Rounding 2046 to the nearest units of 10 is 2050
Rounding 3572 to the nearest units of 100 is 3600
Rounding 8634 to the nearest units of 1000 is 9000

1.3 No result shall be rounded more than once.

Example: 3024.5 rounded to the nearest units of 10 will be 3020;

<u>not</u>

3024.5 rounded to 3025, and then rounded again to 3030.

2. The rounding procedure specified in Section 1 above shall be used for all calculations and recording of data in performing materials testing, except when a specific test method cites a method of rounding which differs from this procedure, for example, the sand equivalent test (AASHTO T 176 or Arizona Test Method 242).

3. Compliance will be based upon interpreting the reported results as though they are rounded to the terms (whole numbers, decimals, or fractions reduced to decimals) of the specifications. For example, a value reported as 8.4% shall be considered as having no deviation from specifications that require 4 – 8%. It would however be a deviation for specifications requiring 4.0 – 8.0%.

4. Computers and most electronic calculators automatically carry several decimal places beyond the point of desired accuracy. At times, results of calculations utilizing these values are different than that achieved when calculations are performed utilizing values that have been rounded to the desired degree of accuracy by the above rules. The user is cautioned that the use of a computer or electronic calculator without re-entry of values after rounding, and discarding any figures beyond those needed, may cause unacceptable variations in final results.